User Manual

S SERIES

This guide describes how to use the inverter. In order to prevent improper operation before use, please carefully read this manual.

Table of Contents

1. Important Notes 2
   1.1 Scope 2
   1.2 Target Group 2
   1.3 Symbols Used 2
   1.4 Symbols Explanation 2
2. Safety 3
   2.1 Appropriate Usage 3
   2.2 PE Connection and Leakage Current 4
   2.3 Surge Protection Devices (SPDs) for PV Installation 4
3. About Product 5
   3.1 About S Series Inverter 5
   3.2 Basic Features 5
   3.3 Terminals Introduction 6
   3.4 Dimensions 6
4. Technical Data 7
   4.1 DC Input 7
   4.2 AC Output 7
   4.3 Efficiency, Safety and Protection 8
   4.4 General Data 8
5. Installation 9
   5.1 Packing List 9
   5.2 Preparation 9
   5.3 Installation Space Required 10
   5.4 Tools Required 10
   5.5 Installation Steps 10
   5.6 Wiring Steps 11
   5.7 Earth Connection 14
   5.8 Communication Device Installation (Optional) 14
   5.9 Inverter Start-Up 17
   5.10 Inverter Switch Off 18
6. Operation 18
   6.1 Control Panel 18
   6.2 Function Tree 19
7. Maintenance 19
   7.1 Alarm List 19
   7.2 Troubleshooting 21
   7.3 Routine Maintenance 21
8. Decommissioning 22
   8.1 Dismantling the Inverter 22
   8.2 Packaging 22
   8.3 Storage and Transportation 22

1. Important Notes

1.1 Scope

This manual describes the assembly, installation, commissioning, maintenance and troubleshooting of the following model(s) of Fox products:

S Series:

S700 S1000 S1500 S2000

S2500 S3000 S3300*

Note: Please keep this manual where it will be accessible at all times.

*The S3300 model is for the Indian and Polish markets only.

1.2 Target Group

This manual is for qualified personnel only. The tasks described in this manual will need to be performed by professional, suitably qualified technicians only.

1.3 Symbols Used

The following types of safety instructions and general information appear in this document as described below:

	Danger! “Danger” indicates a hazardous situation which, if not avoided, will result in death or serious injury.
	Warning! “Warning” indicates a hazardous situation which, if not avoided, could result in death or serious injury.
	Caution! “Caution” indicates a hazardous situation which, if not avoided, could result in minor or moderate injury.
	Note! “Note” provides important tips and guidance.

1.4 Symbols Explanation

This section explains the symbols shown on the inverter and on the type label:

Symbols	Explanation
	Symbol Explanation CE mark. The inverter complies with the requirements of the applicable CE guidelines.
	Beware of hot surface. The inverter can become hot during operation. Avoid contact during operation.
	Danger of high voltages. Danger to life due to high voltages in the inverter!

	Danger. Risk of electric shock!
	Danger to life due to high voltage. There is residual voltage in the inverter which needs 5 min to discharge. Wait 5 min before you open the upper lid or the DC lid.
	Read the manual.
	Product should not be disposed as household waste.

2. Safety

2.1 Appropriate Usage

S series inverter is designed and tested in accordance with international safety requirements. However, certain safety precautions must be taken when installing and operating this inverter. The installer must read and follow all instructions, cautions and warnings in this installation manual.

- All operations including transport, installation, start-up and maintenance, must be carried out by qualified, trained personnel.
- The electrical installation & maintenance of the inverter shall be conducted by a licensed electrician and shall comply with local wiring rules and regulations.
- Before installation, check the unit to ensure it is free of any transport or handling damage, which could affect insulation integrity or safety clearances. Choose the installation location carefully and adhere to specified cooling requirements. Unauthorized removal of necessary protections, improper use, incorrect installation and operation may lead to serious safety and shock hazards or equipment damage.
- Before connecting the inverter to the power distribution grid, contact the local power distribution grid company to get appropriate approvals. This connection must be made only by qualified technical personnel.
- Do not install the equipment in adverse environmental conditions such as in close proximity to flammable or explosive substances; in a corrosive environment; where there is exposure to extreme high or low temperatures; or where humidity is high.
- Do not use the equipment when the safety devices do not work or are disabled.
- Use personal protective equipment, including gloves and eye protection during the installation.
- Inform the manufacturer about non-standard installation conditions.
- Do not use the equipment if any operating anomalies are found. Avoid temporary repairs.
- All repairs should be carried out using only approved spare parts, which must be installed in accordance with their intended use and by a licensed contractor or authorized Fox service representative.
- Liabilities arising from commercial components are delegated to their respective manufacturers.
- Any time the inverter has been disconnected from the public network, please be extremely cautious as some components can retain charge sufficient to create a shock hazard. Prior to touching any part of the inverter please ensure surfaces and equipment are under touch safe temperatures and voltage potentials before proceeding.

2.2 PE Connection and Leakage Current

- The end-use application shall monitor the protective conductor by residual current operated protective device (RCD) with rated fault current Ifn≤280mA which automatically disconnects the device in case of a fault.
- DC differential currents are created (caused by insulation resistance and through capacities of the PV generator). In order to prevent unwanted triggering during operation, the rated residual current of the RCD has to be min 240mA. The device is intended to connect to a PV generator with a capacitance limit of approx. 700nf.

WARNING!
High leakage current! Earth connection essential before connecting supply.

- Incorrect grounding can cause physical injury, death or equipment malfunction and increase electromagnetic interference.
- Make sure that grounding conductor is adequately sized as required by safety regulations.
- Do not connect the ground terminals of the unit in series in case of a multiple installation. This product can cause current with a DC component, where a residual current operated protective device (RCD) or monitoring device (RCM) is used for protection in case of direct or indirect contact, only an RCD or RCM of type B is allowed on the supply side of this product.

For UK

- The installation that connects the equipment to the supply terminals shall comply with the requirements of BS 7671.
- Electrical installation of PV system shall comply with requirements of BS 7671 and IEC 60634-7-712.
- No protection settings can be altered.
- User shall ensure that the equipment is so installed, designed and operated to maintain at all times compliance with requirements of ESQCR22(1)(a).

For AU

- Electrical installation and maintenance shall be conducted by licensed electrician and shall comply with Australia National Wiring Rules.

2.3 Surge Protection Devices (SPDs) for PV Installation

WARNING!

Over-voltage protection with surge arresters should be provided when the PV power system is installed. The grid connected inverter is not fitted with SPDs in both PV input side and mains side.

Lightning will cause damage either from a direct strike or from surges due to a nearby strike.

Induced surges are the most likely cause of lightning damage in majority or installations, especially in rural areas where electricity is usually provided by long overhead lines. Surges may impact on both the PV array conduction and the AC cables leading to the building. Specialists in lightning protection should be consulted during the end use application. Using appropriate external lightning protection, the effect of a direct lightning strike into a building can be mitigated in a controlled way, and the lightning current can be discharged into the ground.

Installation of SPDs to protect the inverter against mechanical damage and excessive stress include a surge arrester in case of a building with external lightning protection system (LPS) when separation distance is kept. To protect the DC system, surge suppression device (SPD type2) should be fitted at the inverter end of the DC cabling and at the array located between the inverter and the PV generator, if the voltage protection level (VP) of the surge arresters is greater than 1100V, an additional SPD type 3 is required for surge protection for electrical devices.

To protect the AC system, surge suppression devices (SPD type2) should be fitted at the main incoming point of AC supply (at the consumer's cutout), located between the inverter and the meter/distribution system; SPD (test impulse D1) for signal line according to EN 61632-1. All DC cables should be installed to provide as short a run as possible, and positive and negative cables of the string or main DC supply should be bundled together.

Avoiding the creation of loops in the system. This requirement for short runs and bundling includes any associated earth bundling conductors. Spark gap devices are not suitable to be used in DC circuits once conducting; they won't stop conducting until the voltage across their terminals is typically below 30 volts.

3. About Product

3.1 About S Series Inverter

S series inverters cover 0.7kW systems up to 3.3kW and are integrated with 1 MPP tracker with high efficiency and reliability.

3.2 Basic Features

- Advanced DSP control technology.
- Utilizes the latest high-efficiency power component.
- Optimal MPPT technology.
- Wide MPPT input range.
- Advanced anti-islanding solutions.
- IP65 protection level.
- Max. Efficiency up to 97.4%. EU efficiency up to 96.8%. THD<3%.
- Safety & Reliability: Transformerless design with software and hardware protection.
- Export limitation (CT/Meter/DRM0/ESTOP).
- Power factor regulation. Friendly HMI.
- LED status indications.
- LCD display technical data, human-machine interaction through touch key.
- PC remote control.

3.3 Terminals Introduction

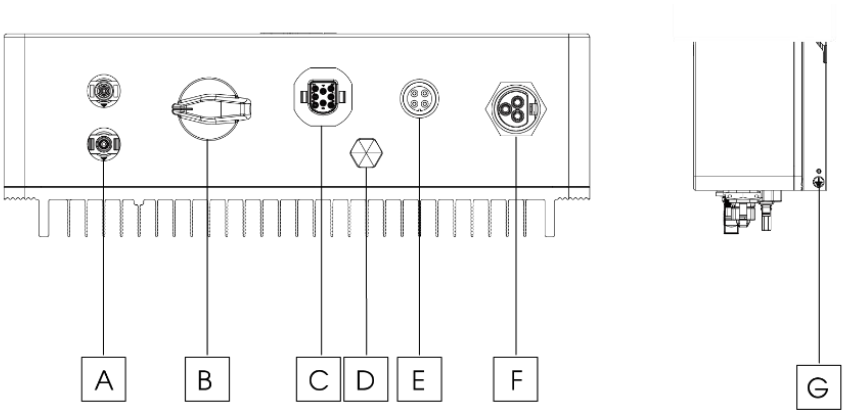

Item	Description
A	PV
B	DC Switch (Optional)
C	COM
D	Waterproof Lock Valve
E	WiFi / GPRS
F	AC Connector
G	Ground Screw

Note: Only authorized personnel are permitted to set the connection.

3.4 Dimensions

For S Series:

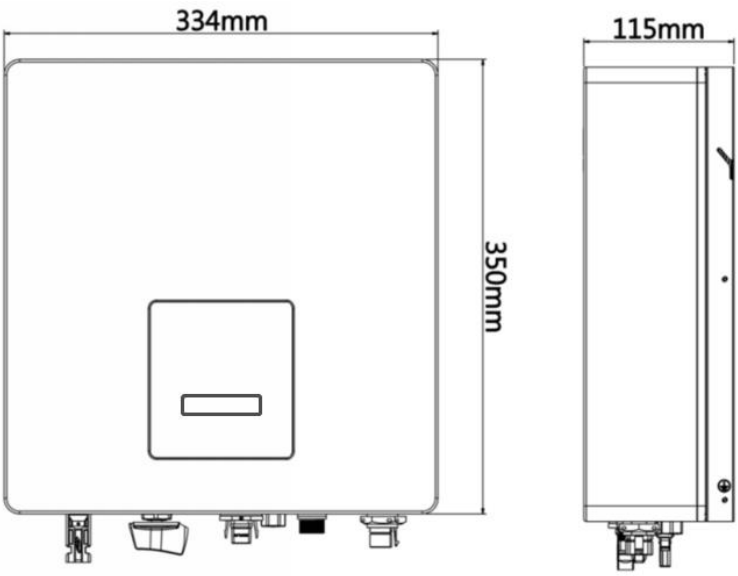

4. Technical Data

4.1 DC Input

Model	S700	S1000	S1500	S2000	S2500	S3000	S3300*
Max. recommended DC power [W]	1050	1500	2250	3000	3750	4500	4950
Max. DC voltage [V]	500	500	500	500	550	550	550
Nominal DC operating voltage[V]	360	360	360	360	360	360	360
MPPT voltage range [V]	50-500	50-500	50-500	50-500	50-550	50-550	50-550
MPPT voltage range @ full load [V]	80-450	110-450	160-450	210-450	240-550	280-550	300-550
Max. input current [A]	12.5						
Max. short circuit current [A]	15						
Start output voltage [V]	60						
No. of MPP trackers	1						
Strings per MPP tracker	1						
DC switch	Optional						

4.2 AC Output

Model	S700	S1000	S1500	S2000	S2500	S3000	S3300*
Rated output power [W]	700	1000	1500	2000	2500	3000	3300
Max. apparent AC power [VA]	800	1100	1650	2200	2750	3300	3300
Rated grid voltage and range [V]	220/230/240						
Rated AC frequency and range [Hz]	50/60						
AC nominal current [A]	3.0	4.3	6.5	8.7	10.9	13.0	14.3
Max. output fault current [A]	3.5	4.8	7.2	9.6	12.0	14.3	14.3
THD	<3%						
Displacement power factor	1 (Adjustable from 0.8 leading to 0.8 lagging)						
Feed in phase	Single-phase						
Over voltage category	PV: OVC II Mains: OVC III						

4.3 Efficiency, Safety and Protection

Model	S700	S1000	S1500	S2000	S2500	S3000	S3300*
Max. MPPT efficiency	99.00%	99.00%	99.00%	99.00%	99.00%	99.00%	99.00%
Euro efficiency	96.50%	96.50%	96.50%	96.80%	96.80%	96.80%	96.80%
Max. efficiency	97.20%	97.20%	97.30%	97.40%	97.40%	97.40%	97.40%
Safety & Protection							
DC reverse-polarity protection	Yes						
Insulation monitoring	Yes						
DC injection monitoring	Yes						
AC short-circuit protection	Yes						
Residual current detection	Yes						
Anti-islanding protection	Yes						
AC output overcurrent protection	Yes						
AC output overvoltage protection	Yes						

4.4 General Data

Model	S700	S1000	S1500	S2000	S2500	S3000	S3300*
Dimension [W/H/D] (mm)	334*350*115						
Net weight [kg]	7.8kg						
Installation	Wall-mounted						
Operating temperature range [°C]	-20...+60 (derating at 45)						
Storage temperature [°C]	-40...+70						
Storage/Operation relative humidity	0%~100%, no condensation						
Max. operating altitude	3000m (derating when > 2000m)						
Ingress protection	IP65 (for outdoor use)						
Isolation type	Transformerless						
Protective class	I						
Night-time consumption	<1W						
Pollution degree	II						
Cooling	Natural						
Noise level	<30dB						
Monitoring module(optional)	External WiFi/GPRS						
Communication	Meter/CT/DRM/RS485						

*India and Poland markets only.

5. Installation

5.1 Packing List

Please un-pack the box, check and make sure you received all items as listed below before installation (excluding optional items):

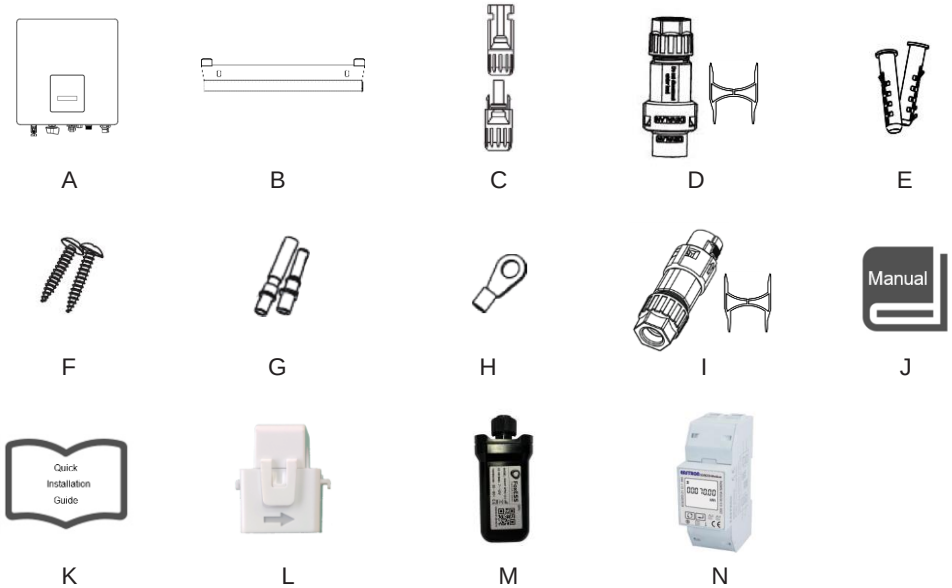

Object	Quantity	Description	Object	Quantity	Description
A	1	Inverter	H	1	Earth terminal
B	1	Bracket	I	1	Communication connector& Unlock tool
C	2	DC connector (F/M)	J	1	Product manual
D	1	AC connector& Unlock tool	K	1	Quick installation guide
E	2	Expansion tube	L	1	CT (Optional)
F	2	Expansion screw	M	1	WiFi/LAN/GPRS (Optional)
G	2	DC pin contact (1*positive, 1*negative)	N	1	Meter (Optional)

5.2 Preparation

- Please refer to the Technical Data to make sure the environmental conditions fit the inverter's requirements (degree of protection, temperature, humidity, altitude, etc.)
- Please avoid direct sunlight, rain exposure and snow build-up during installation and operation.
- To avoid overheating, always make sure the air flow around the inverter is not blocked.
- Do not install in places where gas or flammable substances may be present.
- Avoid electromagnetic interference that can compromise the correct operation of electronic equipment.
- The slope of the wall should be within ±5°.

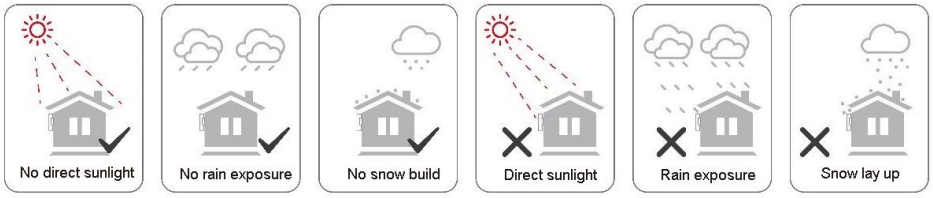

5.3 Installation Space Required

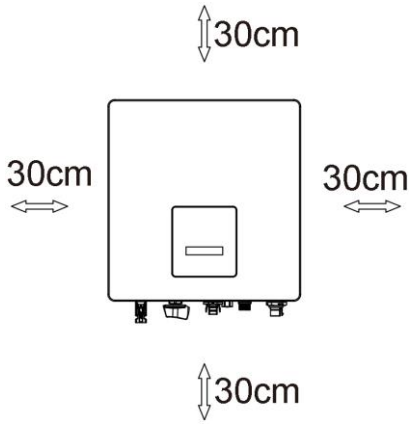

Position	Min Size
Left	30cm
Right	30cm
Top	30cm
Bottom	30cm
Front	30cm

5.4 Tools Required

- Manual wrench;
- Electric drill (drill bit set 8mm);
- Crimping pliers;
- Stripping pliers;
- Screwdriver.

5.5 Installation Steps

Step 1: Fix the bracket on the wall

- Choose the place you want to install the inverter. Place the bracket on the wall and mark the position of the 2 holes from bracket.

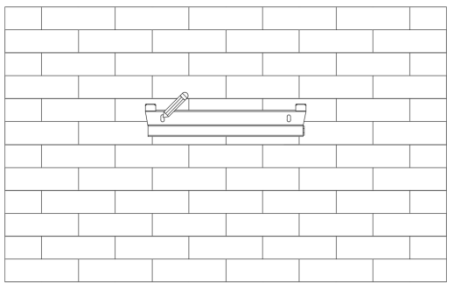

- Drill holes with electric drill, make sure the holes are at least 50mm deep, and then tighten the expansion tubes.

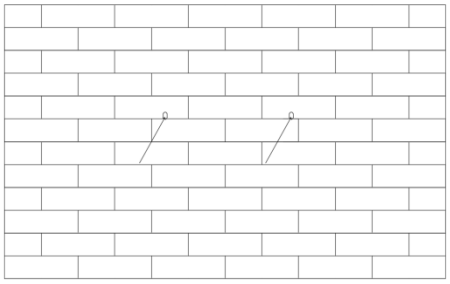

- Insert the expansion tubes into the holes and tighten them. Install the bracket with the expansion screws.

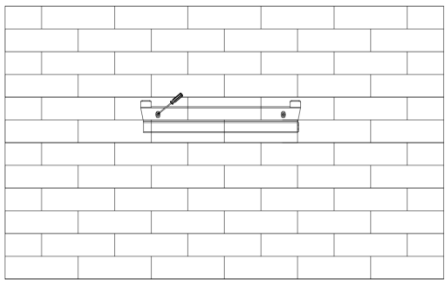

Step 2: Match the inverter with wall bracket

- Hang the inverter over the bracket, slightly lower the inverter, and make sure the 2 mounting bars on the back are fixed with the 2 grooves from bracket properly.

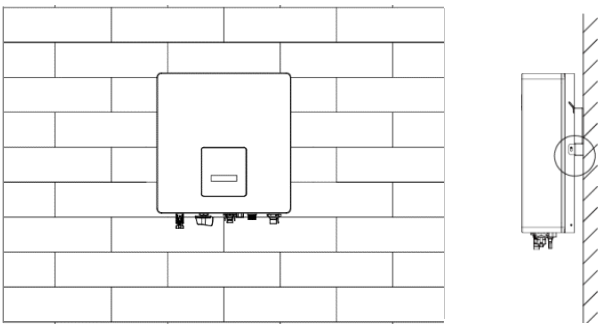

5.6 Wiring Steps

Step 1: PV String Connection

S series inverters can be connected with 1-string of PV modules. Please select suitable PV modules with high reliability and quality. Open circuit voltage of module array connected should be less than 550V, and operating voltage should be within the MPPT voltage range.

	Note! Please choose a suitable external DC switch if the inverter does not have a built-in DC switch.
	Warning! PV module voltage is very high and within a dangerous voltage range, please comply with the electric safety rules when connecting.
	Warning! Please do not make PV positive or negative to ground!
	Note! PV modules – please ensure they are the same type, have the same output and specifications, are aligned identically, and are tilted to the same angle. In order to save cable and reduce DC loss, we recommend installing the inverter as near to the PV modules as possible.

Step 2: DC Wiring

- Turn off the DC switch.
- Choose 12 AWG wire to connect the PV module.
- Trim 6mm of insulation from the wire end.

- Separate the DC connector as below.

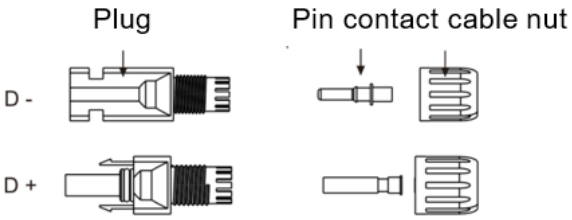

- Insert striped cable into pin contact and ensure all conductor strands are captured in the pin contact.
- Crimp pin contact by using a crimping plier. Put the pin contact with striped cable into the corresponding crimping pliers and crimp the contact.

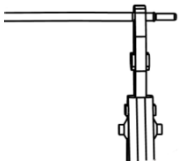

- Insert pin contact through the cable nut to assemble into back of the male or female plug. When you feel or hear a “click” the pin contact assembly is seated correctly.

- Unlock the DC connector
  - Use the specified wrench tool.
  - When separating the DC + connector, push the tool down from the top.
  - When separating the DC - connector, push the tool down from the bottom.
  - Separate the connectors by hand.
- Grid Connection

  S series inverters are designed for single-phase grid. Voltage range is 220/230/240V; frequency is 50/60Hz. Other technical requests should comply with the requirement of the local public grid.

Model	S700	S1000	S1500	S2000	S2500	S3000	S3300*
Cable	2.5mm²	2.5 mm²	2.5mm²	4mm²	4mm²	4mm²	4mm²
Micro-Breaker	16A	16A	16A	25A	25A	25A	25A

Note: A micro-breaker for max output overcurrent protection device shall be installed between inverter and grid, and the current of the protection device is referred to the table above, any load SHOULD NOT be connected with the inverter directly.

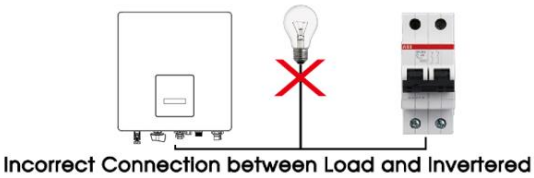

Step 3: AC Wiring

- Check the grid voltage and compare with the permitted voltage range (refer to technical data).
- Disconnect the circuit-breaker from all the phases and secure against re-connection.
- Trim the wires:
  - Trim all the wires to 52.5mm and the PE wire to 55mm.
  - Use the crimping pliers to trim 12mm of insulation from all wire ends as below.

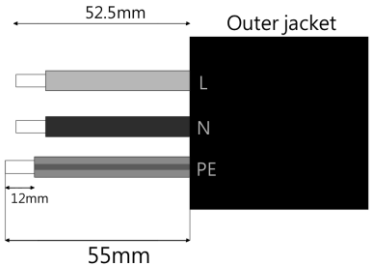

L: Brown/Red Wire

N: Blue/Black Wire

PE: Yellow & Green Wire

Note: Please refer to local cable type and color for actual installation.

- Separate the AC plug into three parts as below.
  - Hold middle part of the female insert, rotate the back shell to loosen it and detach it from female inset.
  - Remove the cable nut (with rubber insert) from the back shell.

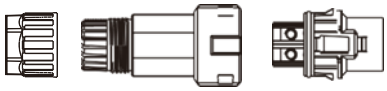

- Slide the cable nut and then the back shell onto the cable.

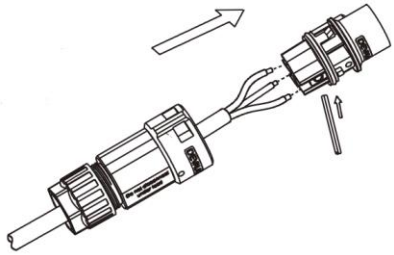

- Push the threaded sleeve into the socket, tighten up the cap on the terminal.

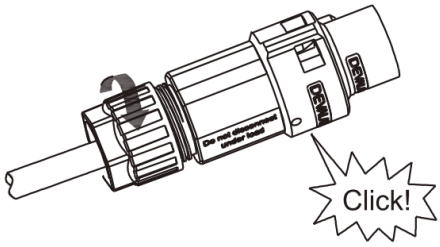

- Push the threaded sleeve to connection terminal until both are locked tightly on the inverter.

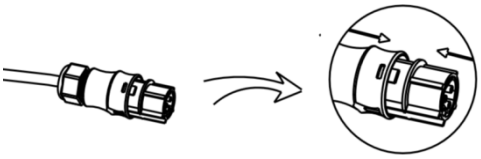

- Remove the AC connector, press the bayonet out of the slot with a small screwdriver or the unlock tool and pull it out, or unscrew the threaded sleeve, then pull it out.

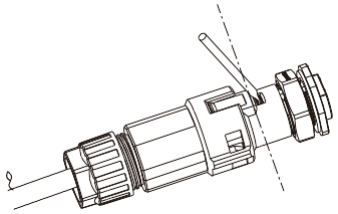

5.7 Earth Connection

Screw the ground screw with screwdriver as shown below:

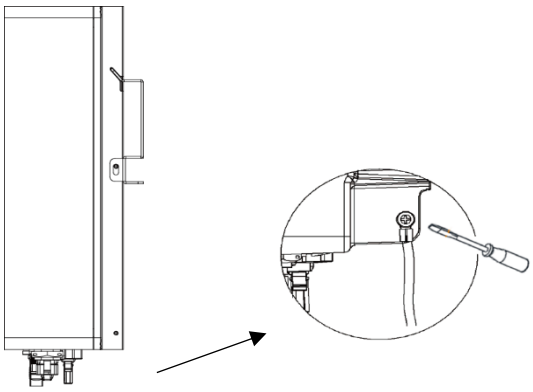

5.8 Communication Device Installation (Optional)

This S series inverter is available with multiple communication options such as WiFi, LAN, GPRS, RS485 and Meter with an external device.

Operating information like output voltage, current, frequency, fault information, etc., can be monitored locally or remotely via these interfaces.

- WiFi/LAN/GPRS (optional)

The inverter has an interface for WiFi/LAN/GPRS devices that allow this device to collect information from inverter; including inverter working status, performance etc., and update that information to monitoring platform (the WiFi/LAN/GPRS device is available to purchase from your local supplier).

Connection steps:

1. For GPRS device: Please insert the SIM Card (please refer to the GPRS product manual for more details).
2. For LAN device: Please complete the wiring between router and LAN device (please refer to the LAN product manual for more details).
3. Plug the WiFi/LAN/GPRS device into “WiFi/GPRS” port at the bottom of the inverter.
4. For WiFi device: Connect the WiFi with the local router, and complete the WiFi configuration (please refer to the WiFi product manual for more details).
5. Set-up the site account on the Fox monitoring platform (please refer to the monitoring user manual for more details).

- CT (optional)

This inverter has an integrated export management function. To enable this function, a power meter or CT must be installed. The CT should be clamped on the main live line of the grid side. The arrow on the CT should be pointing towards the grid. The white cable connects to CT+, and the black cable connects to CT-.

Export limitation setting:

Short press the touch key to switch display or make the number+1. Long press the touch key to confirm your setting.

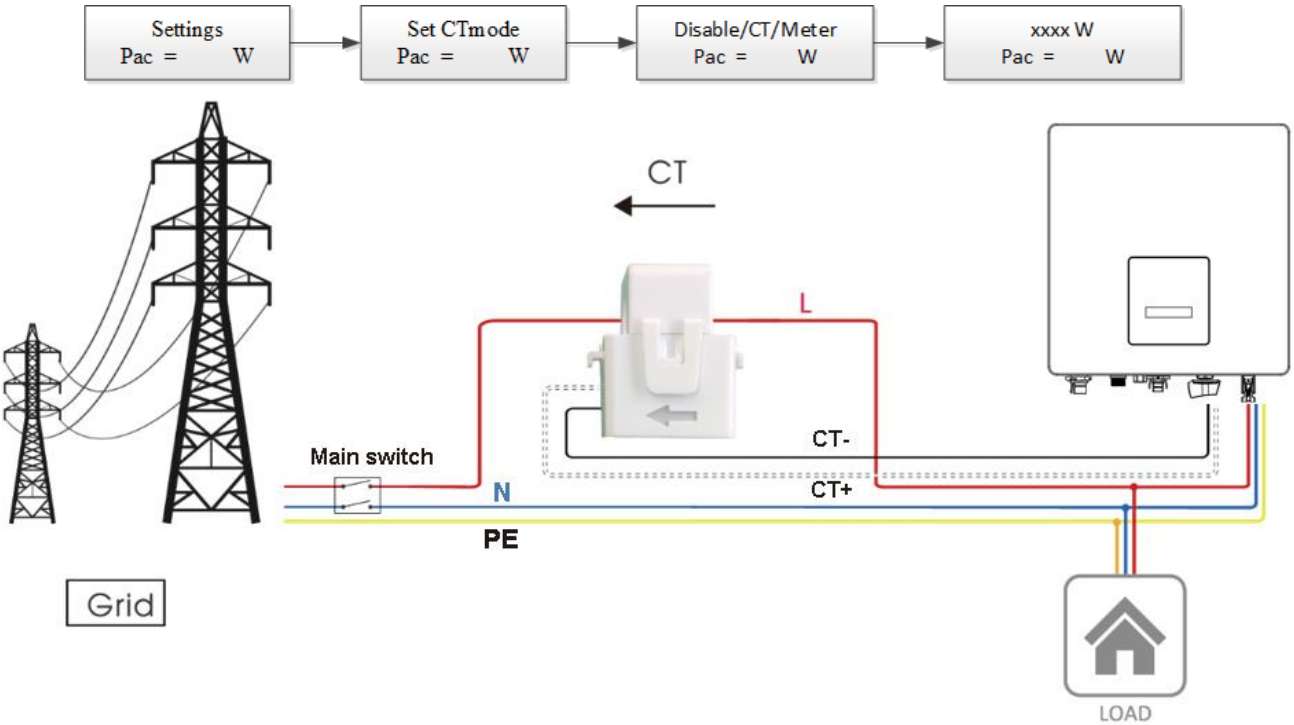

	Note! For a precise reading and control of power, a meter can be used instead of a CT. If the CT is fitted in the wrong orientation, anti-backflow function will fail.

- RS485/Meter

- RS485

RS485 is a standard communication interface which can transmit the real time data from inverter to PC or other monitoring devices.

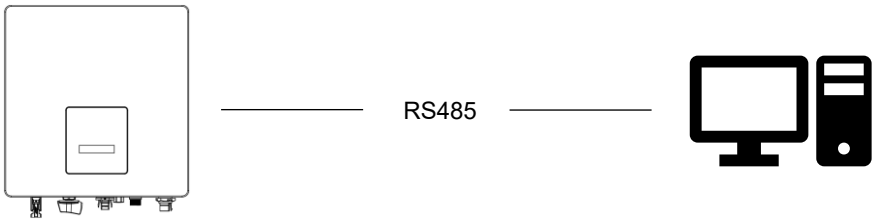

- Meter (optional)

The inverter has integrated export limitation functionality. To use this function, a power meter or a CT must be installed. For Meter installation, please install it on the grid side.

Export limitation setting:

Short press the touch key to switch display or make the Value+1. Long press the touch key to confirm your setting.

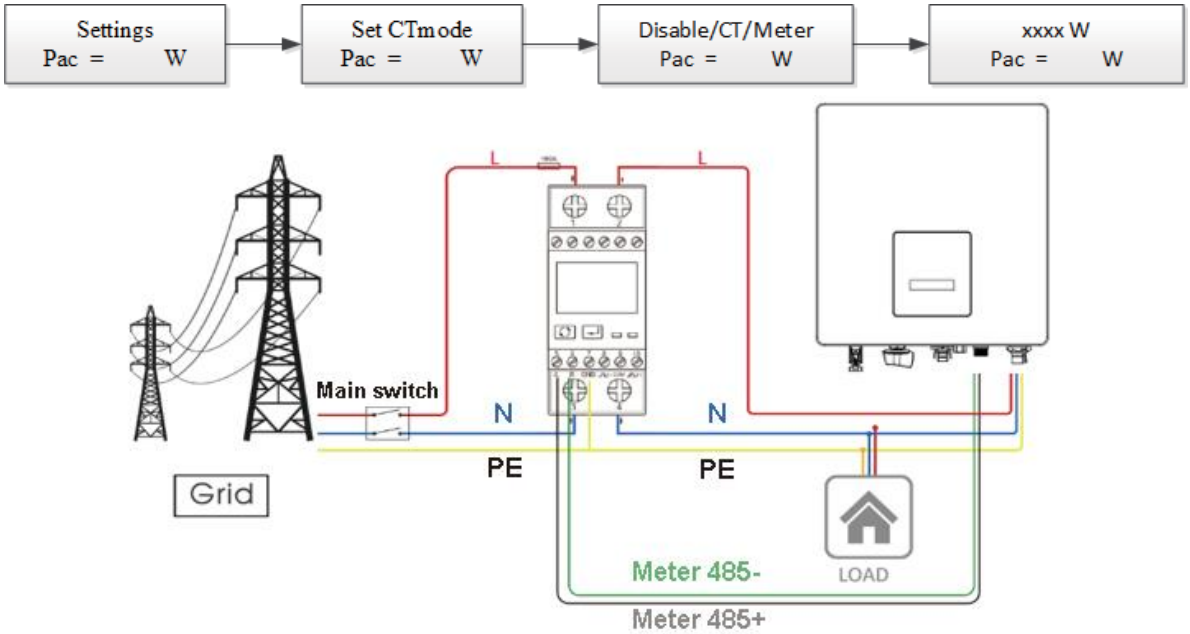

- DRM0/ESTOP

DRM0 setting

Short press the touch key to switch display or make the value+1. Long press the touch key to confirm your setting.

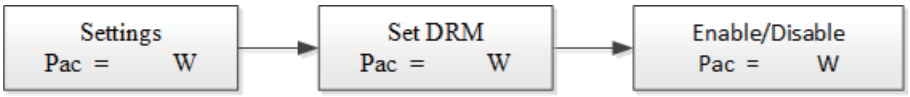

The PIN definitions of CT/RS485/DRM0/ESTOP interface are as below.

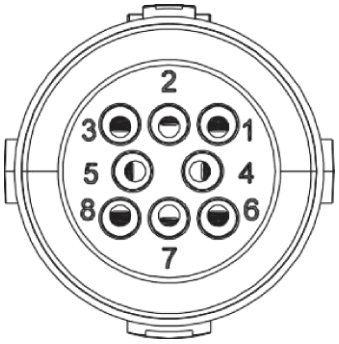

PIN	1	2	3	4	5	6	7	8
Definition	CT+	CT-	METER 485-	METER 485+	GND	DRM0	NC	ESTOP

Model	Socket asserted by shorting pins		Function
DRM0	5	6	Operate the disconnection device.
ESTOP	5	8	Emergency stop the inverter.

Note:

- Isolation Fault (Australia Market Only)

This inverter complies with IEC 62109-2 clause 13.9 for earth fault alarm monitoring. If an Earth Fault Alarm occurs, the fault code Isolation fault will be displayed on the inverter screen and the RED LED indicator will light up.

- Reactive Power Regulation for Voltage Variation (Volt-VAr Mode)

Details of how to enable this mode are contained in the “Advanced Configuration Guide”, which can be accessed at our website at https://www.foxess.com.

- Power Derating for Voltage Variation (Volt-Watt Mode)

Details of how to enable this mode are contained in the “Advanced Configuration Guide”, which can be accessed at our website at https://www.foxess.com.

5.9 Inverter Start-Up

Please refer to the following steps to start-up the inverter:

a) Check if device is fixed well on the wall;

b) Make sure all DC breakers and AC breakers are disconnected;

c) Ensure AC cable is connected to the grid correctly;

d) All PV panels are connected to inverter correctly; DC connectors that are not used should be sealed by cover;

e) Turn on the external AC and DC connectors;

f) Turn the DC switch to the “ON” position (if equipped with DC switch on the inverter).

If the LED is not green, please check the below:

- All the connections are correct.
- All the external disconnect switches are closed.
- The DC switch of the inverter is in the “ON” position.

Note:

- When starting the inverter for the first time, the country code will be set by default to the local settings. Please check if the country code is correct.
- Set the time on the inverter using the button or by using the APP.

Below are the three possible inverter states indicating that the inverter has started up successfully.

Waiting: Inverter is waiting to check the DC input voltage from panels is greater than 45V (lowest start-up voltage) but less than 50V (lowest operating voltage), display will indicate the Waiting status and green LED will flash.

Checking: Inverter will check DC input environment automatically when DC input voltage from the PV panels exceeds 60V and PV panels have enough energy to start inverter, display will indicate the Checking status and green LED will flash.

Normal: Inverter begins to operate normally with green light on. Meanwhile feedback energy to grid, LCD displays present output power.

Note: You can go to the setting interface on the display to follow the instructions if it is the first time to start up.

	Note! Please set-up the inverter if it is the first time to start-up. The above steps are for the regular start-up of the inverter. If it is the first time to start up the inverter, you need to carry-out the initial set-up of the inverter.
	Warning! Power to the unit must be turned on only after installation work has been completed. All electrical connections must be carried out by qualified personnel in accordance with legislation in force in the country of installation.

5.10 Inverter Switch Off

Please follow the below steps to switch off the inverter:

a) Switch off the inverter AC isolation switch.

b) Switch off the DC isolation switch and allow 5 minutes for the inverter to power down completely.

6. Operation

6.1 Control Panel

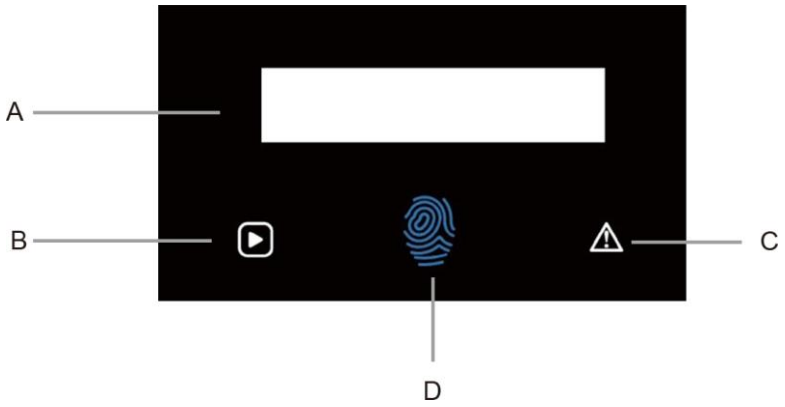

Object	Name	Function
A	LCD Screen	Display the information of the inverter.
B	Indicator LED	Green: The inverter is in normal state.
C		Red: The inverter is in fault mode.
D	Touch Key	The touch key is used to set the LCD to display different parameters. Press time <1s (short press): Next; Press time >2s (long press): Enter. Wait time 15s: Return to start.

6.2 Function Tree

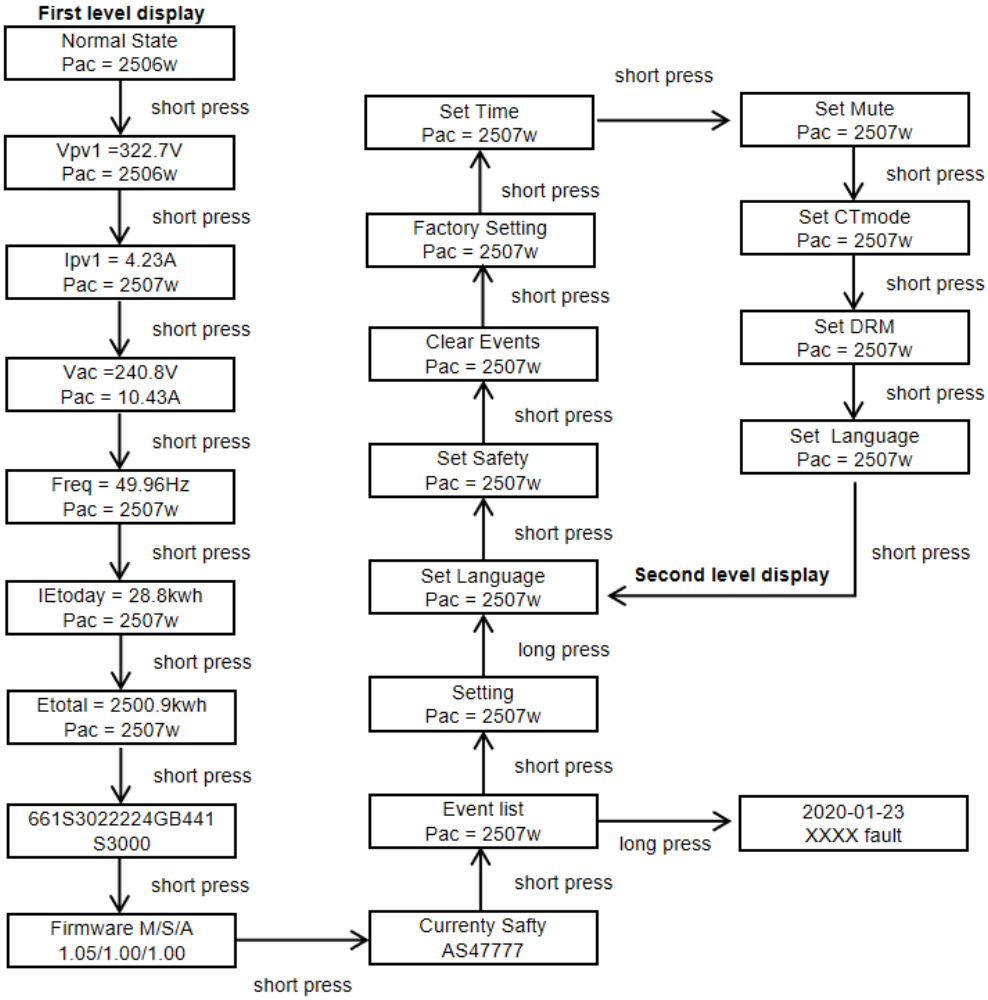

7. Maintenance

This section contains information and procedures for solving possible problems with the Fox inverters and provides you with troubleshooting tips to identify and solve most problems that can occur.

7.1 Alarm List

Fault Code	Solution
SPS Fault	- Turn off the PV and grid, reconnect them. - Please seek for help from us if it does not go back to normal state.
Bus OVP	- Disconnect PV (+), PV (-) with DC. - After the LCD switches off, reconnect and check again. - Please seek for help from us if it does not go back to normal state.
DCI Fault	- Wait for one minute after the inverter reconnects to grid. - Disconnect PV (+), PV (-) with DC. - After the LCD switches off, reconnect and check again. - Please seek for help from us if it does not go back to normal state.

Fault Code	Solution
EEPROM Fault	- Disconnect PV (+), PV (-) with DC. - After the LCD switches off, reconnect and check again. - Please seek for help from us if it does not go back to normal state.
GFC Fault	- Disconnect DC and AC connector, check the surrounding equipment on the AC side. - Reconnect the input connector and check the state of inverter after troubleshooting. - Please seek for help from us if it does not go back to normal state.
GFCD Fault	- Disconnect PV (+), PV (-) with DC. - After the LCD switches off, reconnect and check again. - Please seek for help from us if it does not go back to normal state.
Grid 10Min OVP	- System will reconnect if the grid is back to normal. - Or seek for help from us if it does not go back to normal state.
Grid Freq Fault	- Wait for one minute, grid may go back to normal working state. - Make sure that grid voltage and frequency complies with standards. - Or, please seek for help from us.
Grid Lost Fault	- Please check grid-connection, e.g. wires, interface etc. - Checking grid usability. - Or seek for help from us.
VGridTransient Fault	- Disconnect PV (+), PV (-) with DC. - After the LCD switches off, reconnect and check again. - Please seek for help from us if it does not go back to normal state.
Grid Voltage Fault	- Wait for one minute, grid may go back to normal working state. - Make sure that grid voltage and frequency complies with standards. - Or, please seek for help from us.
Consistent Fault	- Disconnect PV (+), PV (-) with DC. - After the LCD switches off, reconnect and check again. - Please seek for help from us if it cannot go back to normal state.
Isolation Fault	- Check the impedance among PV (+), PV (-) and ground. Impedance should be >1Mohm. - Please seek for help from us if it cannot be detected or the impedance is <1Mohm.
Ground Fault	- Check the voltage of neutral and PE. - Check AC wiring. - Restart inverter, if error message persists, seek for help from us.
OCP	- Turn off the PV and grid, reconnect them. - Or seek for help from us if it does not go back to normal.
PLL Fault	- System will reconnect if the utility is back to normal. - Or seek for help from us if it does not go back to normal state.

Fault Code	Solution
PV OVP	- Check the panel's open-circuit voltage whether the value is similar or already >550Vdc. - Please seek help from us when voltage ≤550Vdc.
Relay Fail	- Disconnect PV (+), PV (-) with DC. - After the LCD switches off, reconnect and check again. - Please seek for help from us if it does not go back to normal state.
Sample Fault	- Disconnect PV (+), PV (-) with DC. - After the LCD switches off, reconnect and check again. - Please seek for help from us if it cannot go back to normal state.
Comm Lost	- Disconnect PV+, PV-, reconnect them. - Or seek for help from us if it does not go back to normal state.
MS Comm Lost	- Disconnect PV (+), PV (-) with DC. - After the LCD switches off, reconnect and check again. - Please seek for help from us if it cannot go back to normal state.
Over Temp	- Check if the environment temperature is over the limit. - Or seek for help from us.

7.2 Troubleshooting

a. Please check the fault message on the System Control Panel or the fault code on the inverter information panel. If a message is displayed, record it before doing anything further.

b. Attempt the solution indicated in table above.

c. If your inverter information panel is not displaying a fault light, check the following to make sure that the current state of the installation allows for proper operation of the unit:

(1) Is the inverter located in a clean, dry, adequately ventilated place?

(2) Have the DC input breakers opened?

(3) Are the cables adequately sized?

(4) Are the input and output connections and wiring in good condition?

(5) Are the configurations settings correct for your particular installation?

(6) Are the display panel and the communications cable properly connected and undamaged?

Contact Fox Customer Service for further assistance. Please be prepared to describe details of your system installation and provide the model and serial number of the unit.

7.3 Routine Maintenance

- Safety check

A safety check should be performed at least every 12 months by a qualified technician who has adequate training, knowledge and practical experience to perform these tests. The data should be recorded in an equipment log. If the device is not functioning properly or fails any of the tests, the device has to be repaired. For safety check details, refer to section 2 of this manual.

- Maintenance checking list

During the process of using the inverter, the responsible person shall examine and maintain the machine regularly. The required actions are as follows.

- Check that if the cooling fins at the rear of the inverters are collecting dust/dirt, and the machine should be cleaned when necessary. This work should be conducted periodically.
- Check that if the indicators of the inverter are in normal state, check if the display of the inverter is normal. These checks should be performed at least every 6 months.
- Check if the input and output wires are damaged or aged. This check should be performed at least every 6 months.
- Get the inverter panels cleaned and their security checked at least every 6 months.

Note: Only qualified individuals may perform the following works.

8. Decommissioning

8.1 Dismantling the Inverter

- Disconnect the inverter from DC Input and AC output. Wait for 5 minutes for the inverter to fully de-energize.
- Disconnect communication and optional connection wirings. Remove the inverter from the bracket.
- Remove the bracket if necessary.

8.2 Packaging

If possible, please pack the inverter with the original packaging. If it is no longer available, you can also use an equivalent box that meets the following requirements.

- Suitable for loads more than 30 kg.
- Contains a handle.
- Can be fully closed.

8.3 Storage and Transportation

Store the inverter in dry place where ambient temperatures are always between -40°C - +70°C;

Take care of the inverter during the storage and transportation; keep less than 4 cartons in one stack.

When the inverter or other related components need to be disposed of, please ensure it is carried out according to local waste handling regulations. Please be sure to deliver any inverter that needs to be disposed from sites that are appropriate for the disposal in accordance with local regulations.

For another language，please scan the QR Code below

The copyright of this manual belongs to FOXESS Co., Ltd Wuxi Branch. Any corporation or individual should not plagiarize, partially or fully copy (including software, etc.), and no reproduction or distribution of it in any form or by any means is permitted. All rights reserved.

FOXESS Co., Ltd Wuxi Branch
Add: No.11, Lijiang Road, Xinwu District, Wuxi
City, Jiangsu Province, China
Tel: 0510- 68092998
WWW.FOX-ESS.COM.

V2.0