HYXiPOWER

User Manual

S7/8/9/10/12K-S

STRING INVERTER

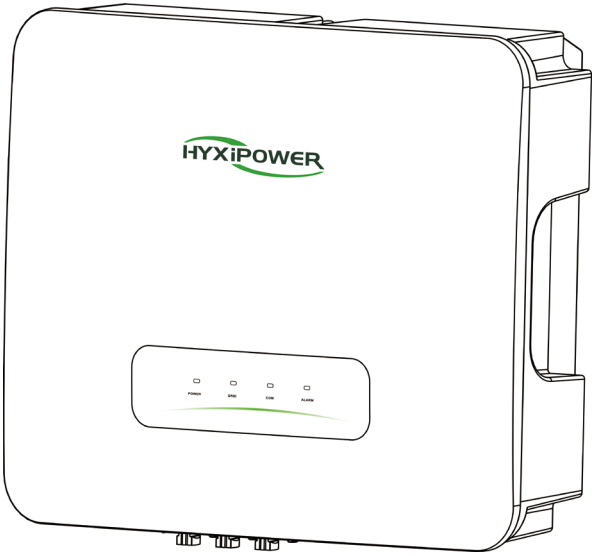

Carefully read this inverter user instructions before using.
Read and save these instructions.

© 2023 ZHEJIANG HYXI TECHNOLOGY CO., LTD. All rights reserved.

This document cannot be copied fully or partially, transferred, or distributed in any form without the prior written permission of ZHEJIANG HYXI TECHNOLOGY CO., LTD (hereinafter referred to as "HYXIPOWER").

TRADEMARKS

and other HYXIPOWER trademarks are the trademarks or registered trademarks of HYXIPOWER

All other trademarks mentioned herein are the properties of their respective owners.

Contents

Preface **1**
Overview 1
For readers 1
Use of the manual 1
Use for symbols 1
1. Safety Precautions **3**
1.1 General Safety 3
1.2 Public Grid 3
1.3 Photovoltaic String 3
1.4 Inverter 4
1.5 Personnel Requirements 4
2. Product Overview **5**
2.1 Product Description 5
2.2 Photovoltaic Grid-Connected Power Generation System 5
2.2.1 Grid Forms Supported by PV Grid-Connected Inverters 6
2.3 Nameplate Description 7
2.4 Product Appearance 8
2.4.1 Symbol Description 8
2.5 Product Mode 9
2.6 Dimensions & Weight 9
2.7 LED Indicator Panel 9
2.7.1 LED indicator status description 9
2.8 Description of The Principle 10
2.8.1 Circuit Diagram 10
2.8.2 Working Modes 11
2.9 Functional Description 11
3. Inspection & Storage **12**
3.1 Safe transport of inverter 12
3.2 Unpacking and Inspection 12
3.3 Inverter Storage 12

4. Mechanical Installation 13
4.1 Installation Precautions 13
4.2 Unpacking for Confirmation 13
4.3 Pre-Installation Preparation 13
4.3.1 Installation Tools 13
4.3.2 Installation Environment 14
4.4 Handling the Inverter 15
4.5 Installing the Inverter 16
4.5.1 Hanging Plate Size 16
4.5.2 Installation Steps 16
5. Electrical Connection 17
5.1 Installation Precautions 17
5.2 Electrical Connection Overview 17
5.3 Connecting the PE cable 18
5.3.1 External Grounding Requirements 18
5.3.2 Grounding Procedure 19
5.4 AC Side Connection 20
5.4.1 AC Side Requirements 20
5.5 DC Side Connection 21
5.5.1 PV Input Configuration 22
5.5.2 Assembling DC Connectors 23
5.5.3 Installing the DC Connector 23
5.6.1 DCS Installation (WIFI module) 24
5.6.3 DCS Installation (Ethernet module) 25
5.7 COM1/DRM/Meter 26
6. Operation 29
6.1 Pre-Operation Inspection 29
6.2 Grid-Connected Inverter Operation 29
6.3 Inverter Shutdown 29
6.4 Inverter Removal 30
6.5 Abolition of Inverter 31
6.6 Routine Maintenance and Overhaul 31

6.6.1 Maintenance Precautions 31
6.6.2 Maintenance Instructions 32
6.6.3 Inverter Periodic Maintenance 32
7. System Commissioning 33
7.1 Installing the App 33
7.2 APP User manual 33
7.3 System debugging 33
8. Appendix 34
8.1 Technical Parameter 34
8.2 Quality Assurance 35
8.3 Isolating Switch Information 36
8.4 Contact Information 36

Preface

Overview

This manual provides the user with product information, detailed installation and use, trouble shooting and daily maintenance of the PV storage inverter.

It does not contain all information about the PV system.

To ensure the proper installation and use of the inverter and its superior performance, before handling, installation, operation and maintenance of the inverter, please read the instruction manual in detail and follow it.

Please read the operating instructions in detail and follow all safety precautions in the instructions.

Scope of application

This manual is intended for the following devices:

- HYX-S7K-S
- HYX-S8K-S
- HYX-S9K-S
- HYX-S10K-S
- HYX-S12K-S

For readers

This manual is intended for professional technicians who need to install, operate and maintain the inverter and for users who need to check the inverter parameters.

All installation operations must be carried out by professional technicians and only by professional technicians.

Use of the manual

Please read the manual carefully before using the product, the content of the manual will be updated and corrected, but it is inevitable that there is a slight discrepancy or error with the actual product.

Users should refer to the actual product purchased and obtain the latest version of the manual by downloading from www.hyxipower.com or through sales channels.

The latest version of the manual is available for download at or through sales channels.

Use for symbols

In order to ensure the safety of the user's person and property when using the product, relevant information is provided and highlighted using the following symbols.

⚠ DANGER

- Indicates a hazard with a high level of risk which, if not avoided, will result in death or serious injury.

⚠ WARNING

- Indicates a moderate potential hazard that could result in death or serious injury if not avoided.

⚠ CAUTION

- Indicates a low potential hazard which, if not avoided, could result in moderate or minor injury.

ⓘ NOTICE

- Indicates a potential risk which, if not known to be avoided, could result in the equipment not functioning properly or in property damage.

1. Safety Precautions

1.1 General Safety

NOTICE

- The "DANGER", "WARNING", "CAUTION", and "NOTICE" items in the manual do not include all safety precautions that should be observed. All work should be carried out in combination with the actual situation on site.
- This equipment should be used in an environment that meets the requirements of design specifications, otherwise it may cause equipment failure, and the resulting equipment functional abnormalities or component damage, personal safety accidents, property losses, etc., are not within the scope of equipment quality assurance.
- The installation, operation and maintenance of the equipment should comply with local laws, regulations and codes. The safety precautions in the manual are only supplementary to the local laws and regulations.
- If an external residual current device (RCD) (type A is recommended) is mandatory, the switch must be triggered at a residual current of 300 mA(recommended). RCD of other specifications can also be used according to local standard.

1.2 Public Grid

NOTICE

- All electrical connections must meet local and national electrical standards.
- The inverter may only be connected to the grid with the permission of the local electricity authority.

1.3 Photovoltaic String

DANGER

- When performing electrical connection work, you must wear personal protective equipment.
- Use a multimeter DC block to measure the positive and negative DC cable polarity to ensure that the polarity is correct; and the voltage is within the allowable range.
- After the DC cable is connected, please make sure that the cable is tightly connected and not loose.

1.4 Inverter

⚠ DANGER

- Before plugging or unplugging the PV connector or AC connector, please use a multimeter to measure to make sure there is no there is no voltage or current.
- Make sure that the voltage and frequency of the grid connection point are in accordance with the grid connection specification of the inverter.
- Do not open the inverter housing when the inverter is operating or energized to protect personnel and property safety.
- After removing all electrical equipment and disconnecting the inverter, wait at least 5 minutes for the internal capacitors to discharge.
- The protective ground of the inverter must be securely connected and, for multiple inverters, ensure that all inverters are connected to the protective ground.
- When multiple inverters are installed, ensure that all inverter enclosures are connected equipotentially to the protective ground. Install the equipment first.
- The protective ground is installed first; the protective ground is removed last when the equipment is dismantled.

⚠ WARNING

- After the inverter is installed, labels and warning signs shall be clearly visible, and obscuring, altering or damaging them is prohibited.
- After the inverter is shut down, there is still a risk of burns, after the inverter has cooled down, wear protective.
- During operations, wear personal protective equipment such as protective clothing, insulated shoes, goggles, safety helmets, and insulated gloves.

1.5 Personnel Requirements

ⓘ NOTICE

- Personnel responsible for the installation and maintenance of Hyxi equipment must first be strictly trained to understand the various
- The personnel responsible for the installation and maintenance of Hyxi equipment must first undergo strict training to understand the various safety precautions and master the correct operation methods.
- Only qualified professionals or trained personnel are allowed to install, operate and maintain the equipment.
- The personnel who operate the equipment, including operators, trained personnel, professionals should have the special operating qualifications required by the local country, such as high voltage operation, special equipment operation qualification, etc.

2.Product Overview

This chapter mainly introduces the appearance of the grid-connected inverter, packaging accessories, nameplate, technical parameters, etc.

2.1 Product Description

HYX-S (7-12) K-S is a single-phase string type PV grid-connected inverter. The main function of a single-phase string type photovoltaic grid-connected inverter is to convert the DC power generated by photovoltaic modules into AC power and feed electrical energy into the grid. This paper mainly covers the following product models:

- HYX-S7K-S
- HYX-S8K-S
- HYX-S9K-S
- HYX-S10K-S
- HYX-S12K-S

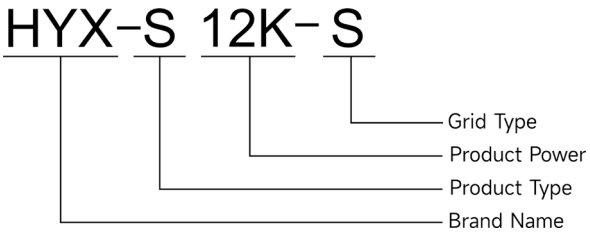

2.2 Photovoltaic Grid-Connected Power Generation System

The PV grid-connected power generation system is composed of PV modules, inverter, meter, load and grid.

The inverter is the core component of the solar PV grid-connected power generation system.

The solar energy is transformed into DC energy by the PV modules, and then transformed into sinusoidal AC energy with the same frequency and phase as the public grid by the PV grid-connected inverter, and feeds this energy into the grid.

The photovoltaic grid-connected inverter is only applicable to solar photovoltaic power generation grid-connected systems, and only uses crystalline silicon solar cells with ungrounded positive and negative electrodes as DC input.

Network Application: Figure: Networking application (optional in dashed boxes).

No.	Name	No.	Name	No.	Name
A	PV Module	F	Grid	K	Router
B	Inverter	G	Load	L	HYXiPOWER Cloud
C	AC Switch	H	Ripple Control Device	M	Smart PV Optimizer
D	AC Power Distribution Unit	I	4G DCS		
E	Meter	J	WiFi DCS		

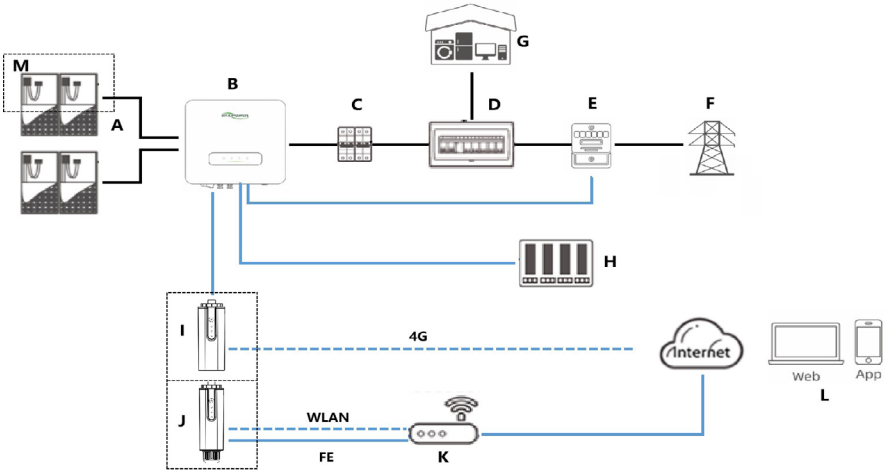

Note:

"_____"indicates a power cable, "_____" indicates a signal cable,"..... "indicates wireless communication.

2.2.1 Grid Forms Supported by PV Grid-Connected Inverters

Power grid types supported by the HYX include TN-S, TN-C, TN-C-S and TT.

In a TT power grid, the N-PE voltage should be lower than 30 V.

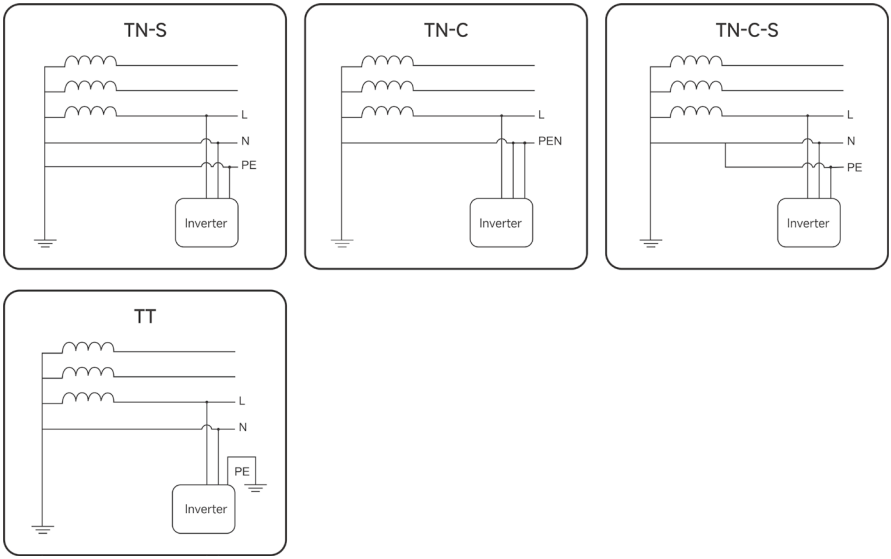

⚠ WARNING

- The inverter is only applicable to the grid-connected power generation system described in this paper.
- Since the inverter is transformerless type, it is required that both the positive and negative terminals of the PV module cannot be grounded, otherwise the inverter will otherwise the inverter will not operate normally.
- During the installation and operation of the inverter, please make sure that the positive or negative pole of the PV module will not be short-circuited to the ground, if short-circuited, it may if short-circuited, it may cause the inverter AC/DC short circuit, resulting in equipment damage, and the resulting damage will not be covered by the warranty.

⚠ CAUTION

- For TT type grids, the zero line voltage to ground must be less than 30V.
- Never connect local loads, such as household appliances, lighting loads, etc., between the inverter and the AC circuit breaker.

2.3 Nameplate Description

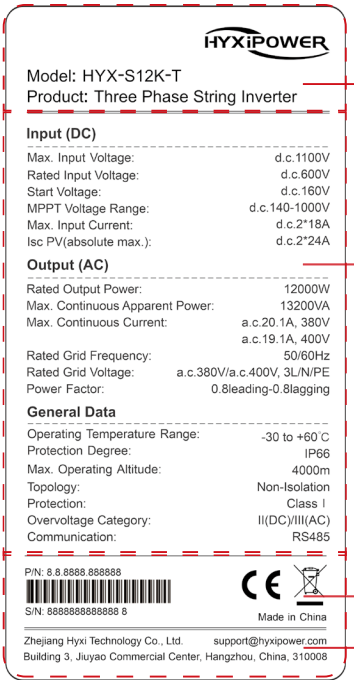

Hyxi trademarks, product types and product models.

Product technical parameters.

Safety symbols and certification marks.

Contact information and serial numbers.

2.4 Product Appearance

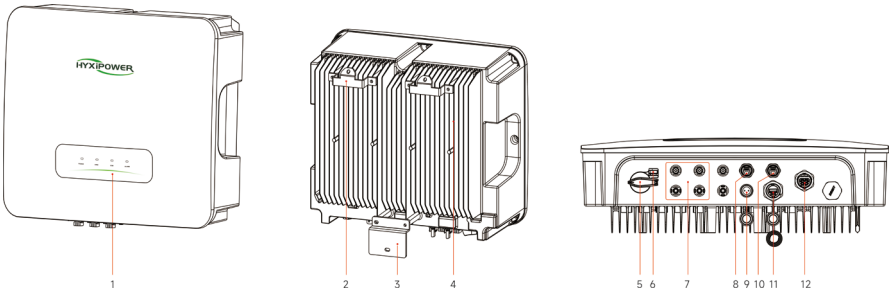

No.	Name	Description
1	LED Indicator Panel	Indicates the current operating status of inverter.
2	Mounting Pegboard	Fixed inverter top.
3	Mounting Bracket	Fixed inverter bottom.
4	Fin Heat Sink	Heat dissipation and ventilation.
5	DC Switch	On/Off DC input.
6	DC Switch Lock	DC lock hole Reserved (Australia).
7	DC Input Terminal (PV+/PV-)	Inverter-PV.
8	COM.1	RS485 communication.
9	METER Port	Smart Meter.
10	DRM Port	DRM function Reserved (Australia).
11	COM.2	Monitoring Port.
12	AC Output Terminal	AC output to GRID.

2.4.1 Symbol Description

Symbol	Description
5min	Disconnect power for at least 5 minutes before servicing the inverter.
	Do not touch the inverter housing while it is in operation.
	Only install and operate the inverter with professional personnel.
	Do not remove the DC input connector or the AC output connector when the inverter is running.
	Read the manual.
	CE mark of conformity.
	Do not dispose of the inverter as household waste.
	High touch current, earth connection essential before connecting supply.

2.5 Product Mode

Product Name	Model	Rated Output Power
Single-phase string inverter	HYX-S7K-S	7000W
Single-phase string inverter	HYX-S8K-S	8000W
Single-phase string inverter	HYX-S9K-S	9000W
Single-phase string inverter	HYX-S10K-S	10000W
Single-phase string inverter	HYX-S12K-S	12000W

2.6 Dimensions & Weight

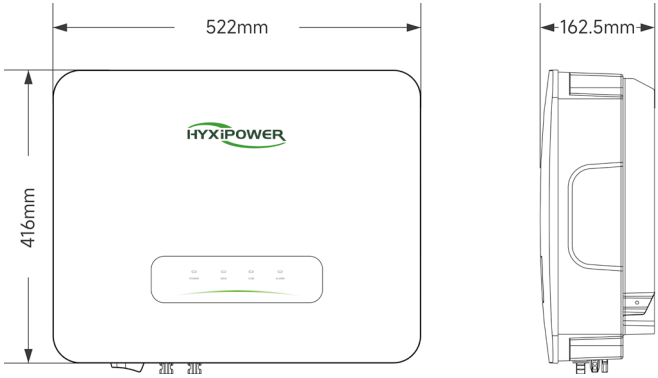

Weight: 21kg

2.7 LED Indicator Panel

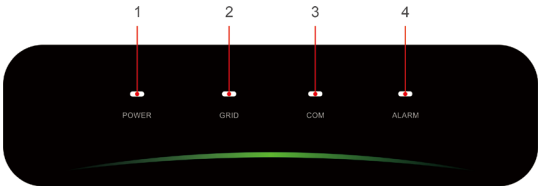

2.7.1 LED indicator status description

No.	Indicator	Status	Description
1	POWER	ON	Inverter Powered ON
		OFF	Inverter Powered OFF
2	GRID	ON	Grid Normal
		Blink 1	Grid Abnormal
		Blink 2	Grid Disconnected
3	COM.	ON	COM. Normal
		OFF	Fault Both Meter
4	ALARM	OFF	Normal
		Blink 1	Inverter Internal Alarm
		Blink 2	Other Alarm

* NOTE: 1 time flashing, interval 1.5 seconds; 2 times flashing, interval 0.2 seconds.

2.8 Description of The Principle

2.8.1 Circuit Diagram

- The DC switch is used to safely cut off the DC current when necessary to ensure the safe operation of the inverter and the safety of personnel.
- The EMI filter filters out electromagnetic interference inside the inverter to ensure that the inverter can meet the requirements of EMC standards.
- The DC input is equipped with two MPPTs to ensure maximum power even under different PV input conditions.
- The inverter unit converts the DC power into grid-compliant AC power and feeds it into the grid.
- The AC filter filters the high frequency component of the inverter output current to ensure that the output current meets the grid requirements.
- The output relay isolates the inverter AC output from the grid and keeps the inverter safely off the grid in case of inverter or grid failure.
- The AC surge protector provides a drain circuit for the AC side overvoltage energy to prevent the impact of AC side overvoltage from causing the inverter internal circuit of the inverter is damaged.

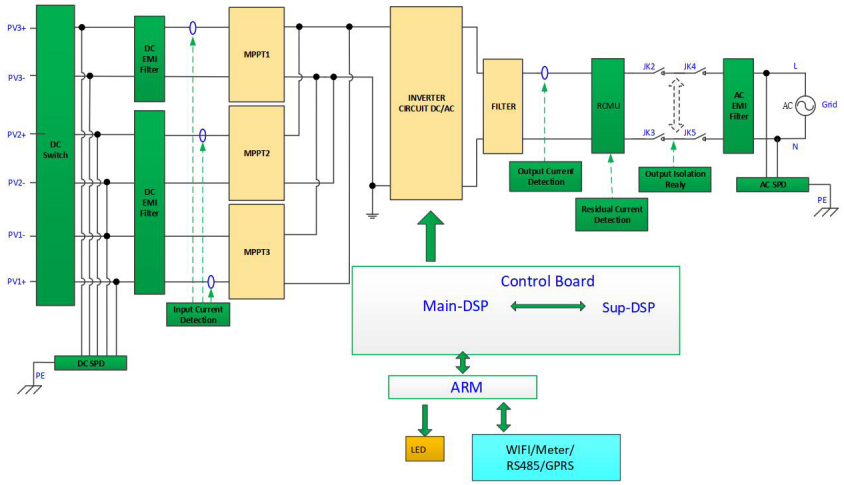

2.8.2 Working Modes

The HYX-S(8~12)K-T can work in Standby, Operating, or Shutdown mode.

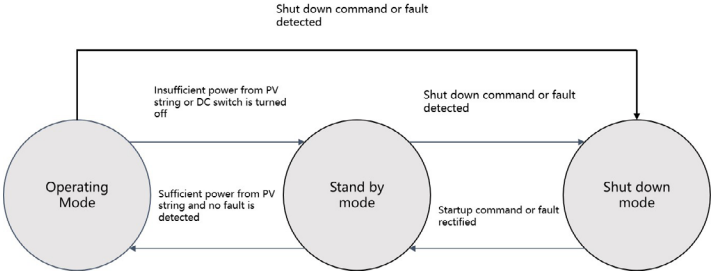

2.9 Functional Description

The functions of the inverter can be summarized as follows:

Inverter function:

- The inverter converts DC power into AC power that meets the requirements of the grid and feeds it into the grid.

Data storage function:

- The inverter stores operating information, fault records, and other system information.

Parameter configuration:

- The inverter provides a variety of parameter configurations, which can be configured via cell phone APP to meet various requirements or to optimize its operation.
- The user can configure the parameters through the mobile phone APP to meet various needs or adjust its operation to the best performance.

Communication interface:

- The inverter provides communication accessory port for accessing the communication module and uploading the monitoring data to the monitoring background through wireless communication.
- After the communication equipment is successfully established, users can view the inverter related information or set the inverter operating parameters, protection parameters, etc. through the Hyxi Smart Energy Management Platform.
- After successful establishment with the communication equipment, users can view inverter related information or set inverter operating parameters, protection parameters, etc. through the Hyxi Smart Energy Management Platform.

Protection functions:

- The inverter is equipped with protection functions such as islanding protection, DC reverse connection protection, AC short circuit protection, leakage current protection, surge protection, etc.

Earth Fault Alarm:

- The device gives an alarm if there is a grounding fault. If the AC side is poorly grounded or not grounded, the LED indicator turns red.

3. Inspection & Storage

3.1 Safe transport of inverter

When transporting the inverter, the original or equivalent packaging should be used, and the maximum layers for original carton is six, as this ensures safe transport.

3.2 Unpacking and Inspection

The equipment has been completely tested and strictly inspected before leaving the factory, but it may still be damaged during transportation, please make a detailed inspection before signing the product.

- Check whether there is any damage to the packing box.
- Check if the goods are complete and in accordance with the packing list.
- Unpack and check if the equipment inside is intact.
- If there is any damage or incomplete goods, please contact with the shipping company or directly with Zhejiang Hyxi Technology Co., Ltd.
- Provide photos of the damage to facilitate the provision of services.

3.3 Inverter Storage

If the inverter is not immediately put into use, it is necessary to meet the following requirements when storing the inverter:

- Do not remove the outer packaging of the inverter.
- The inverter needs to be stored in a clean and dry place and protected from dust and water vapor.
- The storage temperature should be kept at -30°C to +60°C and the relative humidity should be kept at 5~95% RH (non-condensing).
- When stacking multiple inverters, it is recommended that they be placed in the same number of layers as originally shipped.
- Please place the inverters carefully to avoid personal injury or equipment damage caused by tipping the equipment.
- Avoid chemically corrosive substances, otherwise it may corrode the inverter.
- During the storage period, regular inspection is required. If insects and rodents bite the inverter or damage the packaging, the packaging material should be replaced in time.
- After long-term storage, the inverter needs to be inspected and tested by professionals before it can be put into use.
- Please do not dispose of the original packaging of the equipment. It is better to store the equipment in the original box after it is dismantled.

4. Mechanical Installation

4.1 Installation Precautions

⚠ DANGER

- Before installing the inverter, be sure that the inverter is free of any electrical connections.
- Make sure to avoid the utility alignments in the wall before drilling holes to avoid any danger.

⚠ CAUTION

- The instructions in the manual must be followed when handling and placing the equipment.
- Improper handling of the equipment may result in minor, serious or contusive injuries.
- The equipment heat sink must be kept uncovered to ensure adequate cooling inside the equipment.

4.2 Unpacking for Confirmation

The inverter has been completely tested and rigorously inspected before leaving the factory, but damage may still occur during transport. Check carefully before unpacking. Check that the product information on the order and box nameplate is consistent and that the product packaging is intact.

If any damage is detected, please contact the shipping company or contact the supplier directly and provide photos of the damage to facilitate the fastest and best service. When the inverter is stored unused, please put it in the original packing box and keep it moisture and dust proof.

After unpacking the inverter, please check the following items:

- Make sure the inverter main unit is complete and undamaged.
- Make sure the box contains the quick installation guide, certificate of conformity, packing list, interface accessories and installation accessories.
- Confirm that there is no damage or shortage in the delivered contents of the box.
- Verify that the product information on the order and the inverter mainframe nameplate is consistent.

4.3 Pre-Installation Preparation

4.3.1 Installation Tools

Installation tools include, but are not limited to, the following recommended tools and, if necessary, other auxiliary tools can be used in the field.

4.3.2 Installation Environment

Installation environment requirements:

- The inverter has IP66 protection level and can be used for indoor or outdoor installation.
- The installation location should be convenient for electrical connection, operation and maintenance.
- No flammable and explosive materials should be present in the installation environment.
- It must not be installed in a location that is accessible to children.
- Temperature should meet: -30 to +60°C ; Humidity should meet: 0 ~ 100% RH.
- Avoid direct sunlight, rain and snow on the inverter, and choose a sheltered place for the installation to extend the life of the inverter.
- It is very important to make sure the inverter is ventilated and dissipated smoothly, please install the inverter in a ventilated environment.
- The inverter will generate some noise during operation, so it is not recommended to install it in the living area.

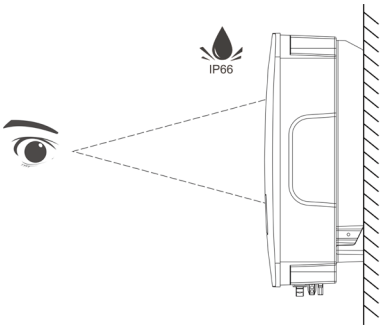

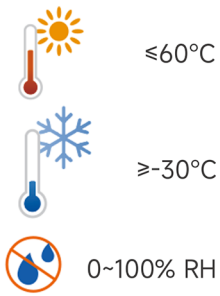

Installation angle requirements:

- The mounting carrier has a load-bearing capacity of at least 4 times the weight of the inverter, and the carrier has fireproof characteristics.
- It is recommended that the inverter be installed vertically or tilted back ≤ 15° to facilitate the heat dissipation of the machine.
- Do not tilt the inverter forward, backward, upside down, horizontally or sideways.

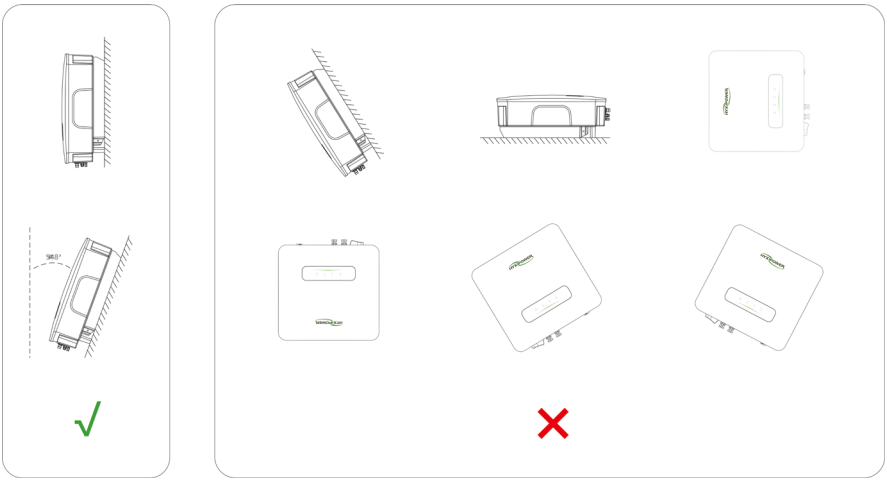

Installation space requirements:

Make sure there is enough space around the inverter to ensure ventilation. The installation space requirements for a single inverter are shown in the figure below.

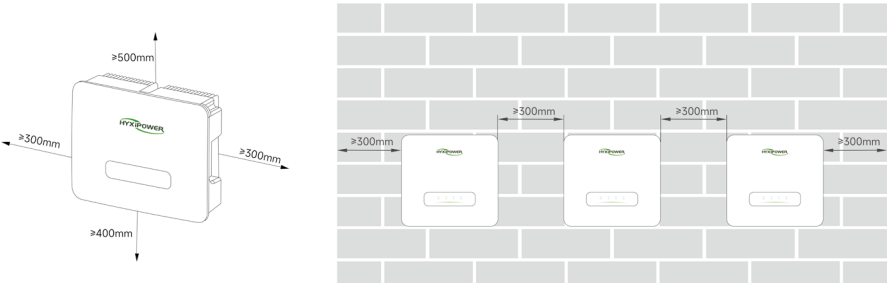

4.4 Handling the Inverter

Before installation, the inverter needs to be removed from the packing box and moved to the selected installation site, when moving the inverter, the following guidance instructions need to be observed:

- Always pay attention to the weight of the inverter.
- Use the handles on both sides of the inverter to lift the inverter.
- One or two installers move the inverter together, or use a suitable moving tool.
- Do not loosen the unit unless it is securely fastened.

4.5 Installing the Inverter

After carrying the inverter to the installation site, mount the pegboard to the wall with the expansion bolt assembly, and then hang the inverter on the pegboard.

4.5.1 Hanging Plate Size

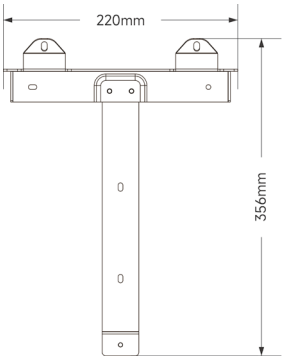

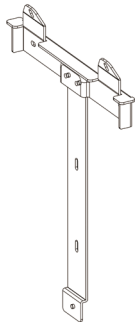

4.5.2 Installation Steps

- Step 1: Place the wall plate horizontally on the wall, recommend to select the hole position shown in the picture and mark the drilling position.
- Step 2: Drill a hole at the location shown, the depth of the hole is about 70mm.
- Step 3: Place the expansion tube and install the wall plate using the expansion bolt assembly.
- Step 4: Secure the mounting plate with M6 screws.
- Step 5: Hang the mounting lugs onto the peg plate and tighten them with M6 screws and finally lock them.

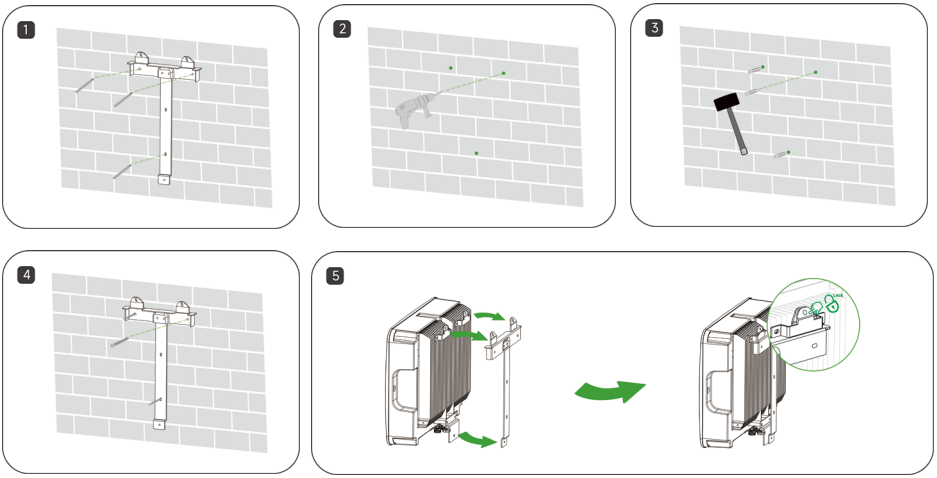

5. Electrical Connection

5.1 Installation Precautions

⚠ DANGER

- High voltage may be present in the inverter.
- Exposure of the PV module to sunlight will generate dangerous voltages.
- Do not close the AC/DC circuit breaker before completing the electrical connection and prevent misconnection.
- Make sure that all cables are not energized before making electrical connections.

⚠ WARNING

- Any improper operation during wiring may result in equipment damage or personal injury or death.
- The wiring operation must be done by professional technicians only.
- The cables used in the PV power generation system must be firmly connected, intact, well insulated and of appropriate specifications.

⚠ CAUTION

- The wiring process must follow the relevant rules of the local power grid and the relevant safety instructions of PV modules.
- All electrical installations must comply with the electrical standards of the country and region where they are installed.
- The inverter can be connected to the grid only after obtaining the permission of the local power department.

5.2 Electrical Connection Overview

Cable	Type	Specifications
PV cable	Outdoor multi-core copper wire cable complying with 1100V and 18A standard	Conductor cross-sectional area: 4–6mm^2 Cable outer diameter: 5.5–9mm
Communication cable	CAT 5E outdoor shielded network cable	Conductor cross-sectional area: 4–6mm^2
AC Output power cable	Outdoor copper cable	Conductor cross-sectional area:8-16mm^2, Cable outer diameter: 6AWG
Ethernet cable	CAT 5E outdoor shielded network cable	0.2mm^2~ 0.35mm^2
Additional grounding cable	Outdoor single-core copper wire cable, M4 OT terminal	Conductor cross-sectional area ≥ 6 mm^2

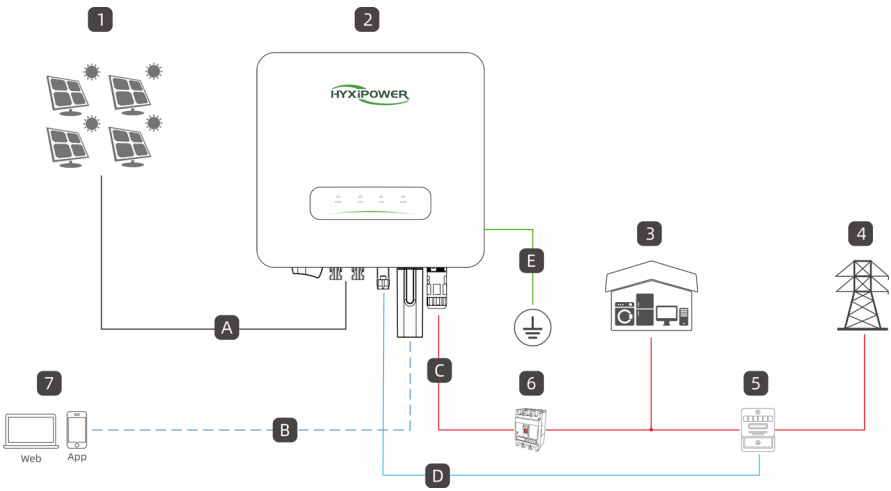

5.3 Connecting the PE cable

Since the inverter is transformerless, the positive and negative terminals of the PV string must not be grounded, otherwise the inverter will not operate properly.

⚠ WARNING

- Before connecting the AC side, the PV string and the communication connection, please make an external ground connection.
- The ground connection of the external protective earth terminal is not a substitute for the connection of the PE terminal in the AC wiring, but must ensure that both are reliably grounded. Otherwise, Hyxi will not take any responsibility for the possible consequences.

5.3.1 External Grounding Requirements

- In the PV power generation system, all non-current-carrying metal parts and equipment housings should be grounded (e.g. PV mounts, etc.).
- The external grounding terminal of a single inverter should be grounded near the end.
- When there are multiple inverters, the external grounding terminals of all inverters and the grounding points of PV mounts should be connected to the equipotential line (depending on the site conditions) to ensure that the external grounding of all inverters is grounded.

⚠ WARNING

- Make sure this terminal is permanently grounded.

5.3.2 Grounding Procedure

NOTICE

- Pay attention not to damage the core wire when stripping a cable.
- The cavity formed after crimping the conductor strip of the OT terminal needs to wrap the core wire completely. The core wire needs to contact the OT terminal closely.
- Wrap the wire crimping area with the heat shrink tubing or the PVC insulation tape. The following figure uses the heat shrink tubing as an example.
- When using the heat gun, protect devices from being scorched.
- The cross-sectional area of the secondary grounding cable must be the same as the cross-sectional area of the PE core in the AC cable.

The secondary grounding cable and terminal block are to be prepared by the customer.

- Step 1: Make the cable and crimp the terminal block.
- Step 2: Remove the screws from the grounding terminal and use a screwdriver to secure the cable.

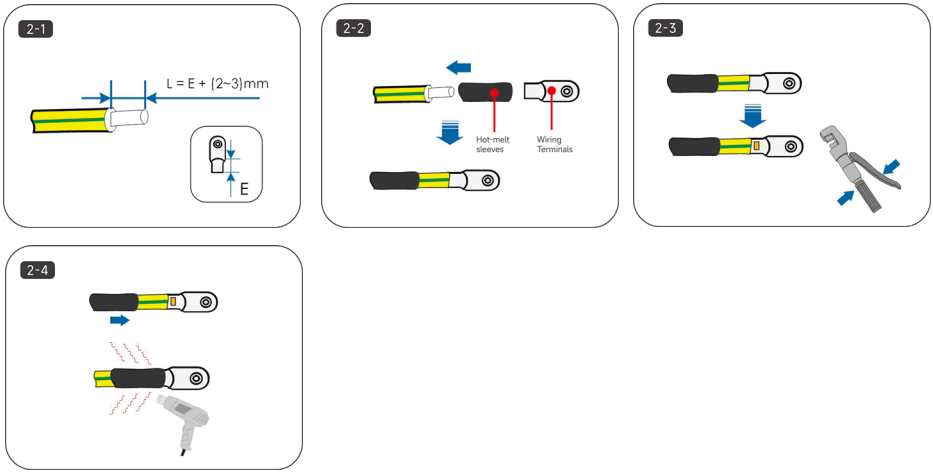

- Step 3: Apply silicone or paint to the grounding terminal to improve its corrosion resistance.

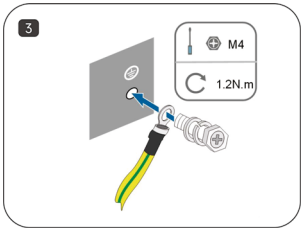

5.4 AC Side Connection

5.4.1 AC Side Requirements

Before connecting to the grid, make sure that the grid voltage and frequency meet the requirements of the inverter, please refer to the "Technical Data" for detailed parameters.

Otherwise, contact the power company to solve the problem.

NOTICE

- Inverters can only be connected to the grid with the local power company's access permit.
- A single-phase AC switch needs to be installed on the AC side of the inverter. To ensure that the inverter can safely disconnect itself from the power grid when an exception occurs, select a proper overcurrent protection device in compliance with local power distribution regulations.

AC Circuit Breakers

An independent two-pole circuit breaker must be installed on the output side of the inverter to ensure safe disconnection from the grid. The recommended specifications are as follows.

Inverter Model	Recommended Specification
HYX-S7K-S	50A
HYX-S8K-S	50A
HYX-S9K-S	50A
HYX-S10K-S	62A
HYX-S12K-S	75A

NOTICE

- Multiple inverters must not share a single AC circuit breaker.
- No load may be connected between the inverter and the AC circuit breaker.

Leakage current protecto

The inverter is equipped with an integrated comprehensive leakage current monitoring unit.

When the inverter detects leakage current greater than the allowed value, it will be quickly disconnected from the power grid. If the leakage protection switch is installed outside, the working current must be ≥ 300mA.

5.4.2 AC Side Wiring

- Step 1: Disconnect the AC circuit breaker and secure it against reconnection.

NOTICE

- Ensure that the cable jacket is inside the connector.
- Ensure that the exposed core wire is totally inserted into the cable hole.

NOTICE

- Ensure that AC terminations provide firm and solid electrical connections. Failing to do so may cause inverter malfunction and damage to its AC connectors.
- Ensure that the cable is not twisted.

Step 2: Remove the fastener and then take the wire terminal socket out.
Step 3: Unscrew the swivel nut and take out the fastening case and seal ring.
Step 4: Strip the cable as shown in the following figure.
Step 5: Pass the cable through the AC connector and lock the terminal screws.
Step 6: Assemble the AC connectors one by one, insert the fastener, and tighten the swivel nut.
Step 7: Connect the AC connector with the inverter.
Step 8: Use the clasp to remove the AC connector from inverter

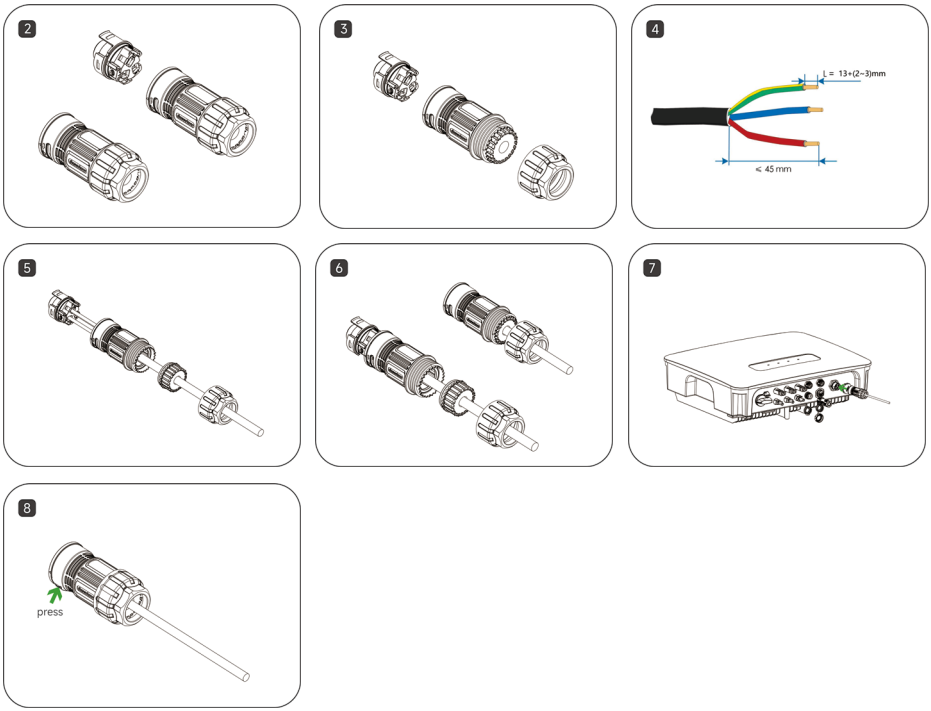

5.5 DC Side Connection

DANGER

- Before connecting the DC input power cable, ensure that the DC voltage is within the safe range (lower than 60 V DC), and that the DC SWITCH is set to the OFF position. Failure to do so could generate high voltage, which may cause electric shocks.

DANGER

- When the inverter is operating, it is not allowed to operate the DC input power cable, such as connecting or disconnecting a PV string or a PV module in a PV string. Failing to do so may cause electric shocks.
- If no PV string is connected to a DC input terminal of the inverter, do not remove the watertight cap from the terminal. Otherwise, the IP rating of the inverter will be affected.

WARNING

Ensure that the following conditions are met. Otherwise, the inverter may be damaged, or even a fire could happen.

- PV modules connected in series in each PV string are of the same specification.
- The open-circuit voltage of each PV string is always lower than or equal to 600V DC.
- The maximum short-circuit current of each PV string must be lower than or equal to 24A.
- The DC input power cable is correctly connected. The positive and negative terminals of a PV module are connected to corresponding positive and negative DC input terminals of the inverter.
- If the DC input power cable is reversely connected, do not operate the DC switch and positive and negative connectors. Wait until the solar irradiance declines at night and the PV string current reduces to below 0.5A, and then turn off the DC switch. Remove the positive and negative connectors to correct the polarity.

NOTICE

- Because the output of the PV string connected to the inverter cannot be grounded, ensure that the PV module output is insulated to ground.
- The PV strings connecting to the same MPPT route should contain the same number and model of PV modules or Smart PV optimizers.
- During the installation of PV strings and the inverter, the positive or negative terminals of PV strings may be short-circuited to ground if power cables are not properly installed or routed. An AC or DC short circuit may occur and damage the device when the inverter is operating. The caused device damage is not covered under any warranty.

5.5.1 PV Input Configuration

The inverter has two PV input areas, each equipped with an independent MPPT that can operate independently.

In order to make full use of the PV panel input power, the PV strings in the same input area should have the same structure, including: the same type, number of panels, tilt angle and azimuth angle.

The structure of PV strings in different input areas can be different, including: different panel types, different number of cells in the string, different tilt and azimuth angles.

The same tilt and azimuth angles.

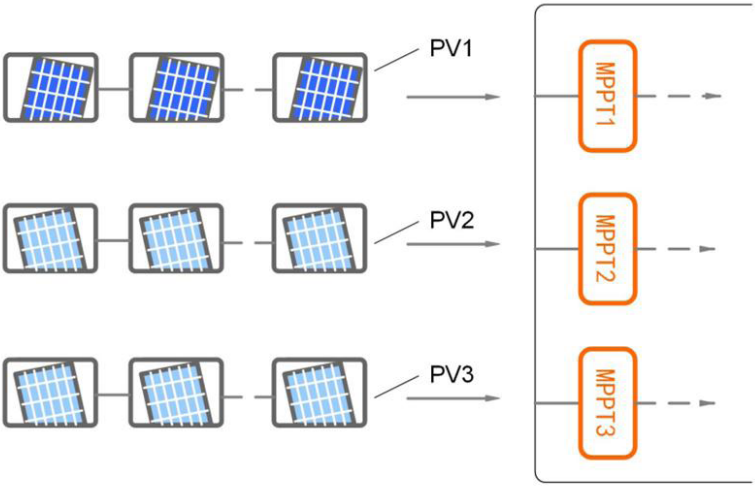

5.5.2 Assembling DC Connectors

- Step 1: Strip all DC cable insulation by approximately 7 mm.
- Step 2: Use crimping pliers to bundle the cable ends at the terminals.
- Step 3: Insert the cable through the cable sealing sleeve, insert it into the insulating sleeve and fasten it, and pull the cable gently to make sure it is tightly connected. Use 2.5~3N·m force to tighten the sealing sleeve and insulation sleeve.
- Step 4: Use a multi-meter to check the correct polarity of the PV string connection cable.

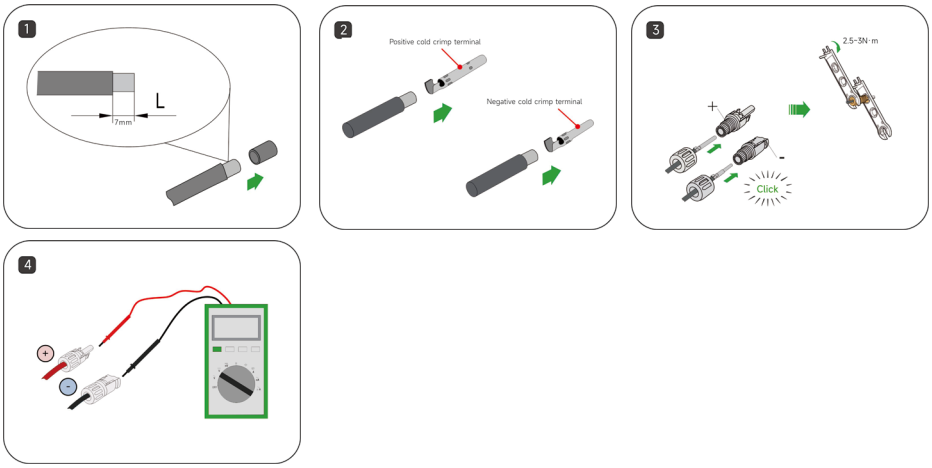

5.5.3 Installing the DC Connector

⚠ DANGER

- High voltage may be present in the inverter !
- Make sure that all cables are not energized before performing electrical operations.
- The AC circuit breaker switch must not be closed until the inverter electrical connections are complete.

⚠ CAUTION

- If the DC input polarity is reversed, the inverter will be in a fault or alarm condition and will not operate properly.
- Please follow the above requirements to choose the correct terminals, otherwise the damage caused to the equipment will not be covered by the warranty.

- Step 1: Turn the DC switch to "OFF" manually.
- Step 2: Check the PV string cable connections for correct polarity and make sure that the open circuit voltage does not exceed the inverter input limit of 600V.
- Step 3: Connect the PV connectors to the corresponding terminals until a click is heard and seal the vacant DC terminals with MC4 waterproof plugs

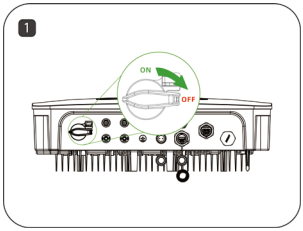

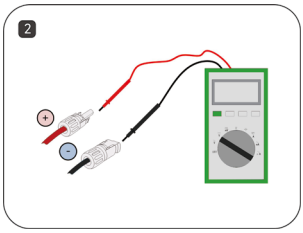

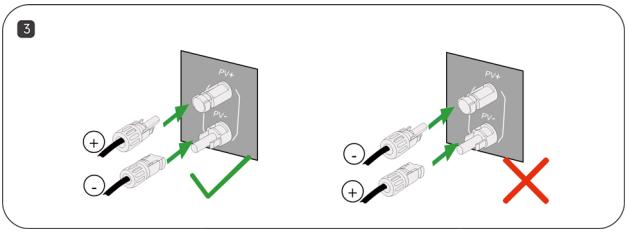

5.6 Communication Connection

5.6.1 DCS Installation (WIFI module)

- Step 1: Remove the waterproof cover at the communication interface of the inverter;
- Step 2: Insert DCS into the corresponding communication terminal at the bottom of the inverter and tighten it to ensure it is secure.

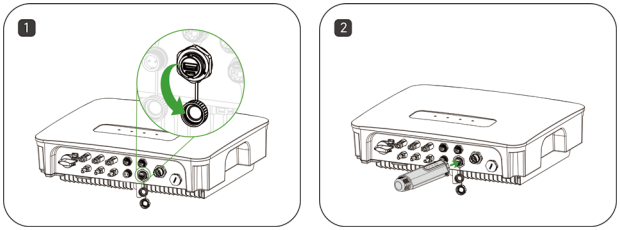

5.6.2 DCS Installation (4G module)

- Step 1: Remove the protective cover of DCS and insert the SIM card;
- Step 2: Install the waterproof cover of DCS;
- Step 3: Remove the waterproof cover at the communication interface of the inverter;
- Step 4: Insert DCS into the corresponding communication terminal at the bottom of the inverter and tighten it to ensure it is secure.

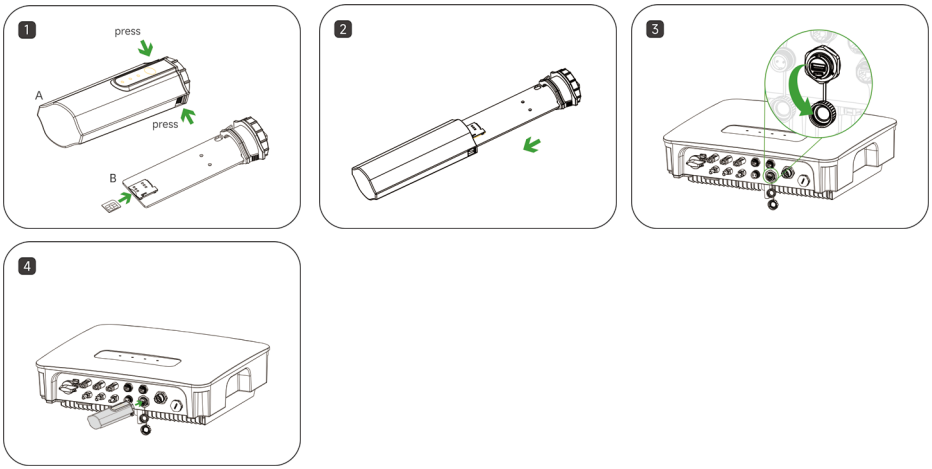

5.6.3 DCS Installation (Ethernet module)

- Step 1: Replace the bottom plug of DCS with the Ethernet plug;
- Step 2: Insert the network cable connector into the network junction;
- Step 3: Remove the waterproof cover at the communication interface of the inverter;
- Step 4: Insert DCS into the corresponding communication terminal at the bottom of the inverter and tighten it to ensure it is secure.

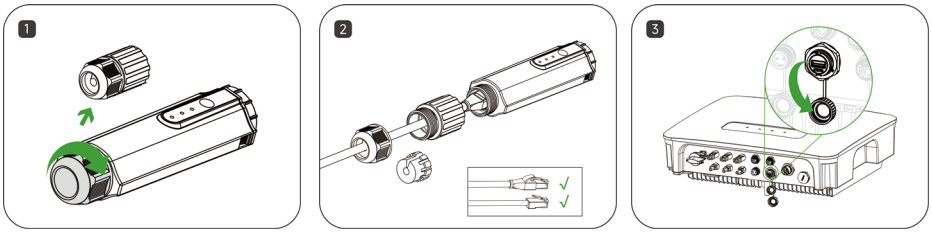

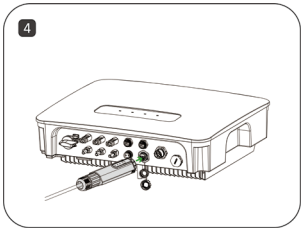

5.7 COM1/DRM/Meter

COM1

The COM1 interface is an RS485 interface, which is mainly used for communication networking in inverter cascade connection scenarios. The PIN pins are defined as follows:

PIN	1	2	3	4
Definition	RS485-MO-A	RS485-MO-B	RE485-GRID-A	RS485-GRID-B

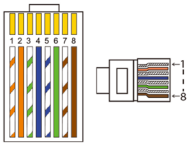

DRM Function

DRM

In Australia and New Zealand, the inverter supports the demand response modes as specified in the standard AS/NZS 4777.

The following figure shows the wiring between the inverter and the external DRED.

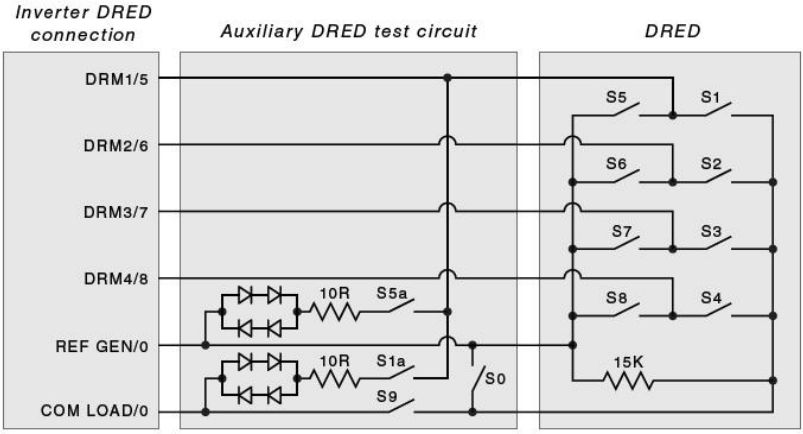

Mode	Inverter DRM Connection	Request
DRM0	REF GEN & COM LOAD	• When switches S0 and S9 are switched on, the solar inverter should be turned off. • When switch S0 is switched off, and switch S9 is switched on, the solar inverter should be grid-tied.

The inverter is equipped with a RJ45 terminal for connecting the external DRED. As shown in the following figure, pin 5 and pin 7 are used for asserting the DRM0 mode.

PIN	1	2	3	4	5	6	7	8
Definition	DRM1/5	DRM2/6	DRM3/7	DRM4/8	COM LOAD/0	GND	REF GE/0	GND

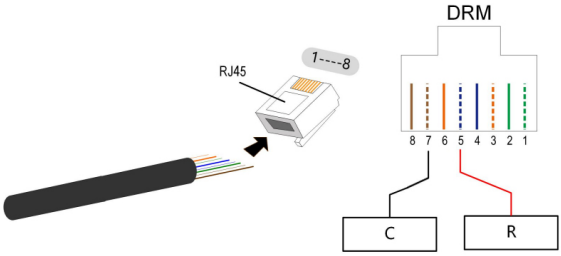

Enable the DRM function through the HYXiPOWER APP. If there are any problems, contact your distributor first. If the problem persists, contact HYXiPOWER.

The DRM function is only applicable to devices for Australia and New Zealand.

Meter

Inverter & Meter Communication Connection Steps

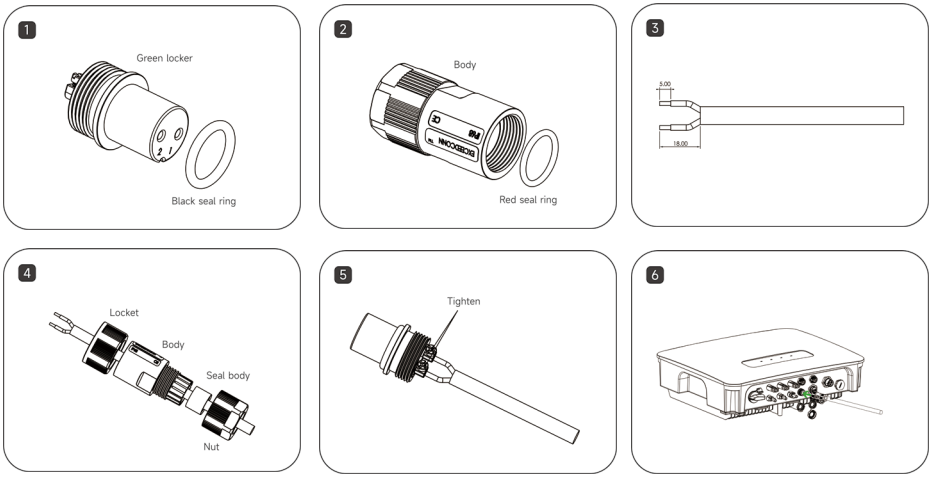

Meter Cable Connection

The following figures show the cable connections between the inverter and DTSU666 meter.

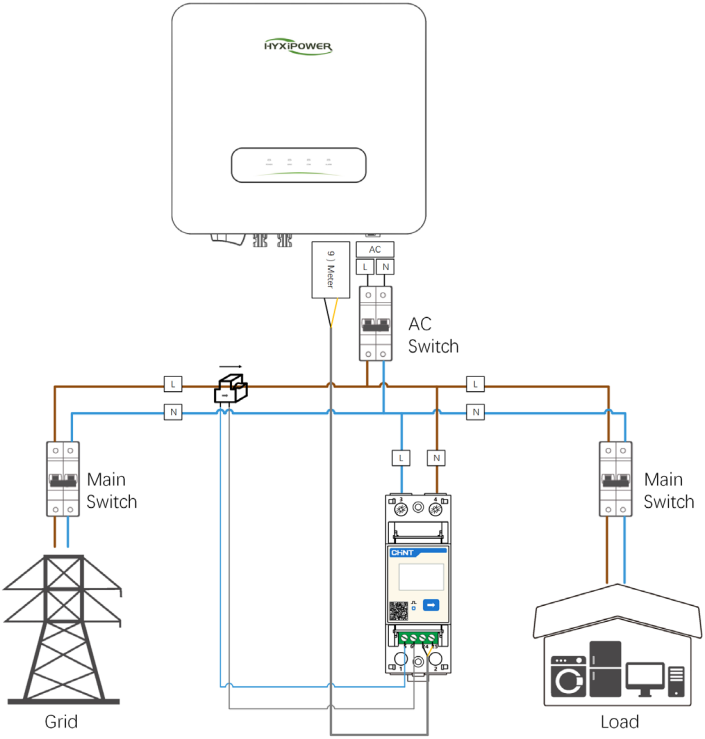

6. Operation

This chapter introduces the operation of PV inverter, which mainly covers the inspection before inverter operation, inverter grid connection operation, inverter shutdown and inverter routine maintenance and repair precautions.

This chapter introduces the operation of PV inverter, mainly involves the inspection of inverter before operation, inverter grid connection operation, inverter shutdown, and inverter routine maintenance.

6.1 Pre-Operation Inspection

Before running the PV grid-connected inverter, the following items (not limited to) must be strictly checked:

- Confirm that the installation location of the inverter meets the requirements of Section 4.3.2 and ensure easy installation, disassembly, operation and maintenance of the inverter.
- Verify that the mechanical installation of the inverter meets the requirements of Section 4.5.
- Verify that the electrical connections to the inverter meet the requirements of Section 5.3.
- Verify that all switches are in the "off" position.
- Make sure no construction tools, etc. are left on the top of the machine or in the junction box (if the machine has one).
- AC circuit breakers are selected in accordance with this manual and local standards.
- All safety signs and warning labels are securely attached and clearly visible.
- Verify that the PV module open circuit voltage meets the requirements of the DC side parameters of the inverter in the Appendix.

⚠ CAUTION

- To ensure the safe, normal and stable operation of PV power generation systems, all newly installed, renovated and repaired grid-connected PV generation system and its grid-connected inverter must be inspected before operation.

6.2 Grid-Connected Inverter Operation

Please strictly follow the following steps to turn on the inverter and complete the grid-connected operation of the inverte:

- Step 1: Make sure that all items checked in section 6.1 are satisfied.
- Step 2: Close the AC side circuit breaker of the inverter public grid and the DC switch integrated with the inverter.
- Step 3: Observe the status of the inverter LEDs (see 2.7.1 LED Status Description for details).

6.3 Inverter Shutdown

⚠ CAUTION

- Burning hazard !
- After the inverter has been shut down, there is still a risk of burns. After the inverter has cooled down, it is necessary to wear protective gloves before operating the inverter.

It is not necessary to shut down the inverter under normal circumstances, but it is necessary to shut down the inverter when maintenance or repair work needs to be performed.

Follow the steps below to disconnect the inverter from the AC and DC power sources, as failure to do so may result in injury or damage to the equipment.

- Step 1: Disconnect the external AC circuit breaker and prevent reconnection due to misuse.
- Step 2: Disconnect the external DC circuit breaker and turn the DC switch of the inverter to "OFF".
- Step 3: Wait for at least 5 minutes until the internal capacitor is completely discharged.
- Step 4: Use a current clamp to check the DC cable to make sure there is no current.

6.4 Inverter Removal

⚠ CAUTION

- Danger of burns and electric shocks!
- After disconnecting the inverter from the grid and the PV panels, wait at least 5 minutes before touching the internal conductive components.

NOTICE

- Before dismantling the inverter, both AC and DC must be powered down.
- If the inverter has more than two DC terminals, the outer DC connector needs to be removed before the inner DC connector can be removed.

- Step 1: Refer to "5. Electrical Connections" and follow the steps in reverse order to disconnect all electrical connections from the inverter.
- To remove the DC connector, use the MC4 wrench to loosen the locking part of the DC connector and install the waterproof plug.
- Step 2: Refer to "4. Mechanical Installation" and follow the steps in reverse order to remove the inverter.
- Step 3: If necessary, remove the wall plate.
- Step 4: If the inverter is to be put into use at a later date, store the inverter properly as described in "3.2 Inverter storage".

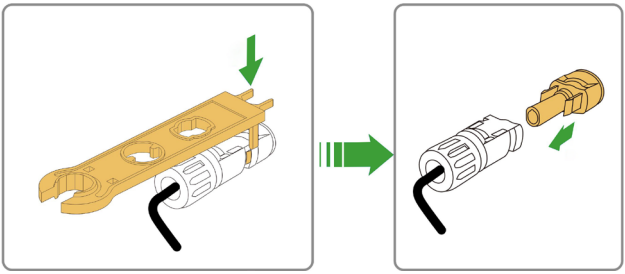

6.5 Abolition of Inverter

⚠ CAUTION

- Some parts and equipment of the inverter, such as capacitors, may cause environmental pollution.
- Please do not dispose of this product with household waste, and dispose of it in accordance with the regulations for disposal of electronic waste used at the installation site.

6.6 Routine Maintenance and Overhaul

In the solar PV grid-connected power generation system, the PV grid-connected inverter can automatically complete the operation of grid-connected power generation, stopping and switching on, etc. even when the day and night change and the season change.

In the solar photovoltaic grid-connected power generation system, the inverter can automatically complete the operation of grid-connected power generation and stop-start without human control. In order to ensure and extend the service life of the inverter, in addition to using the inverter in strict accordance with the contents of this manual, it is necessary to perform the necessary routine maintenance and repair of the inverter.

6.6.1 Maintenance Precautions

Improper maintenance operations can cause injury to personnel or damage to equipment.

⚠ DANGER

- Disconnect the grid-side AC circuit breaker, then disconnect the DC switch.
- Wait at least 5 minutes until the internal components are discharged before performing maintenance or service operations.
- Use test equipment to verify that no voltages or currents are present.

⚠ CAUTION

- When performing electrical connections and maintenance, post warning signs to prevent non-personnel from entering the electrical connection or maintenance area.

⚠ CAUTION

- Restart the inverter only after troubleshooting faults that affect the safety performance of the inverter.
- The inverter does not contain service parts inside, do not replace the internal components of the inverter without permission.
- Please contact Hyxi after-sales service for maintenance, unauthorized disassembly of the machine Hyxi will not assume any warranty and joint and several responsibilities.
- Comply with electrostatic protection norms and wear anti-static bracelets to avoid unnecessary contact with the circuit board.

6.6.2 Maintenance Instructions

The inverter cleaning steps are as follows:

- Step 1: Disconnect the input and output sides and wait 10 minutes.
- Step 2: Clean the inverter surface and the air inlet and outlet with a soft brush or vacuum cleaner.
- Step 3: Repeat section 6.1 and restart the inverte.

6.6.3 Inverter Periodic Maintenance

Inspection content	Inspection method	Maintenance
Save inverter operation data	• Use monitoring software to read the inverter data in real time and regularly backup the data recorded by the monitoring software. • Save the operation data, parameters, and logs of the inverter recorded in the monitoring software to a file. • Check the monitoring software and view various parameter settings of the inverter through the hand-held keyboard.	Once/quarter
Inverter operation condition	• Observe whether the inverter is firmly installed, and whether there is damage or deformation. Listen to the inverter for abnormal sounds. When the system is connected to the grid, check various variables. • Check whether the inverter housing is heating • normally, and use a thermal imager to monitor the system heating.	Once/half year
Inverter cleaning	• Check the humidity and dust in the environment around the inverter, and clean the inverter if necessary.	
Electrical connection	• Check whether the system cable connection is loose and the inverter wiring terminals are loose, and then tighten them according to the method specified in Section 5.5.2. • Check the cable for damage, especially if there are cuts on the skin that contact the metal surface.	
Safety functions	• Check the inverter LEDs and system shutdown function. Simulate the shutdown and check the shutdown signal communication. • Check the warning label and replace it if necessary.	

7. System Commissioning

7.1 Installing the App

Method 1

Download and install the App through the following application stores:

- App Store (iOS)
- Google Play

Method 2

Scan the following QR code to download and install the App according to the prompt information:

7.2 APP User manual

For more information on using the HYXiPower APP, please refer to the user manual "HYXiPOWER APP".

7.3 System debugging

For system configuration and debugging, please refer to the user manual "HYXiPOWER Local Debugging APP".

8. Appendix

8.1 Technical Parameter

Product Model	HYX-S7K-S	HYX-S8K-S	HYX-S9K-S	HYX-S10K-S	HYX-S12K-S
PV Input					
Max. input power	11.6kW	12.8kW	14.4kW	16.0kW	19.2kW
Max. input voltage	600V				
Rated input voltage	360V				
Start-up voltage	80V				
MPPT operating voltage range	40V~560V				
Full-load MPPT Voltage Range	210V~500V				
Max. input current per MPPT	20A/20A		20A/20A/20A		
Max. short-circuit current	24A/24A		24A/24A/24A		
Number of MPP trackers	2		3		
Max. input number per MPP tracker	1/1		1/1/1		
Max. backfilling current	0A				
AC output					
Rated output power	7kW	8kW	9kW	10kW	12kW
Max. apparent power[1]	7.7kVA	8.8kVA	9.9kVA	11kVA	13.2kVA
Rated output voltage	1/N/PE, 220/230/240V				
Rated AC grid frequency	50/60Hz				
Rated output current	31.8A	36.4A	40.9A	45.5A	54.5A
Max. output current	35A	40A	45A	50A	60A
Adjustable power factor	>0.99 (0.8 leading…0.8 lagging)				
Max. total harmonic distortion	<3%				
Efficiency					
Max. efficiency	98.1%				
European weighted efficiency	97.6%				
MPPT efficiency	99.9%				
Protection					
Active anti-islanding protection	General Electric Frequency Shift				
Utility monitoring	Yes				
Insulation monitoring	Yes				
Residual current monitoring	Yes				
DC reverse polarity protection	Yes				
DC switch	Yes				
AC overcurrent protection	Yes				
AC short-circuit protection	Yes				
AC overvoltage protection	Yes				
DC/AC surge protection	Type II				
Max. output overcurrent protection	Yes				
General Data					
Dimension (W*H*D)	522*416*162.5 mm				
Weight	21kg				

Product Model	HYX-S7K-S	HYX-S8K-S	HYX-S9K-S	HYX-S10K-S	HYX-S12K-S
Nighttime power consumption	<1W				
Operating temperature range	-30~+60°C (Derating from 45°C)				
Relative operating humidity	0-100%RH				
Degree of protection	IP66				
Cooling	Natural Convection				
Operating altitude	≤ 4000m				
Display	LED+APP				
Communication	RS485 / WIFI / 4G				
Overvoltage Level	DC II / AC III				
Topology	Non-isolated				
Protective Class	Class I				
Safety/EMC Standard	IEC/EN 62109-1/-2, EN 61000-6-1/-2/-3/-4				

8.2 Quality Assurance

Zhejiang Hyxi Technology Co., Ltd. (hereinafter referred to as the Company) will repair or replace the product with a new one free of charge.

Evidence:

During the warranty period, customers need to show the invoice and date of purchase of the product. At the same time, the trademark on the product should be clearly visible, or the right not to quality assurance.

Conditions:

The replacement defective products shall be disposed of by the Company; the customer shall allow reasonable time for the Company to repair the defective equipment.

Liability Exemption:

We have the right not to carry out quality assurance if the following circumstances occur:

- The whole machine and parts have exceeded the free warranty period.
- Shipping damage.
- Incorrect installation, modification or use.
- Operation in very harsh environments beyond those described in this manual.
- Machine failure or damage caused by installation, repair, alteration or disassembly not by our service organization or personnel.
- Installation and use beyond the scope specified in the relevant international standards.
- Damage caused by an abnormal natural environment.

NOTICE

- In case of changes in product dimensions and parameters, the latest information of our company shall prevail without prior notice.

8.3 Isolating Switch Information

Isolating switch model	GHX5-32P/6P 1100-25-2-0
Isolating switch manufacturer	Beijing People's Electric Plant Co., Ltd
(i) rated insulation voltage	1500V
(ii) rated impulse withstand voltage	8000V
(iii) suitability for isolation	No
(iv) rated operational current	25A
(v) utilization category and/or PV utilization category	DC-PV2
(vi) rated short-time withstand current Icw)	700A
(vii) rated short-circuit making capacity Icm)	1400A
(viii) rated breaking capacity	100A

8.4 Contact Information

If you have any questions about this product, please contact us.

In order to provide you with faster and better after-sales service, we need your assistance in providing the following information.

- Equipment model: _____
- Serial number of the device: _____
- Fault code / name: _____
- A brief description of the fault phenomenon:

_____

_____

_____

Version: UMEN-S12K-S-Ver1.0-202312
The manual is subject to change without notice while the product is being improved.

Zhejiang Hyxi Technology Co., Ltd.
Building 3, Jiuyao Commercial Center, Hangzhou, China, 310008
www.hyxipower.com
support@hyxipower.com