User Manual

H3K/3K6/4K/4K6/5K/6K/8K-HS

HYBRID INVERTER

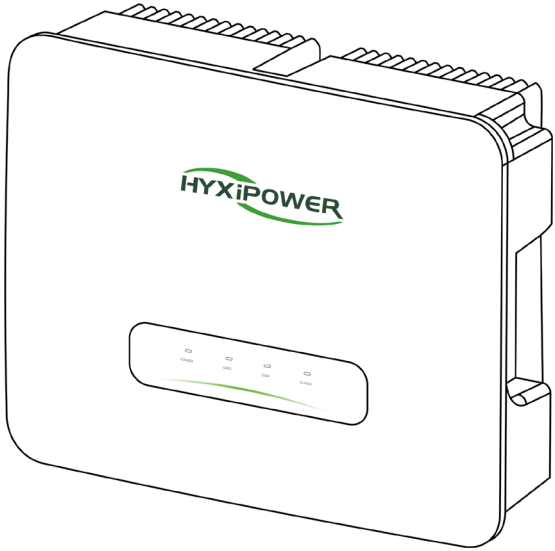

Carefully read this inverter user instructions before using.
Read and save these instructions.

© 2023 ZHEJIANG HYXI TECHNOLOGY CO., LTD. All rights reserved.

This document cannot be copied fully or partially, transferred, or distributed in any form without the prior written permission of ZHEJIANG HYXI TECHNOLOGY CO., LTD (hereinafter referred to as "HYXIPOWER").

TRADEMARKS

and other HYXIPOWER trademarks are the trademarks or registered trademarks of HYXIPOWER All other trademarks mentioned herein are the properties of their respective owners.

CONTENTS

Preface **1**
Overview 1
Scope of application 1
For readers 1
Use of the manual 1
Use of symbols 1
1. Safety Precautions **3**
1.1 General Safety 3
1.2 Public Grid 3
1.3 Photovoltaic String 3
1.4 Inverter 4
1.5 Personnel Requirements 4
2. Product Overview **5**
2.1 Product Description 5
2.2 Photovoltaic Hybrid System 5
2.2.1 Grid Forms Supported By PV Grid-Connected Inverters 6
2.3 Nameplate Description 7
2.4 Product Appearance 7
2.4.1 Symbol Description 8
2.5 Product Model 8
2.6 Dimensions & Weight 8
2.7 LED Indicator Panel 9
2.7.1 LED indicator status description 9
2.8 Description of The Principle 9
2.9 Functional Description 10
3. Inspection & Storage **12**
3.1 Unpacking and Inspection 12
3.2 Inverter Storage 12
4. Mechanical Installation **13**
4.1 Installation Precautions 13
4.2 Unpacking for Confirmation 13
4.3 Pre-Installation Preparation 14
4.3.1 Installation Tools 14
4.3.2 Installation Environment 14
4.4 Handling the Inverter 16
4.5 Installing the Inverter 16
4.5.1 Hanging Plate Size 16

4.5.2 Installation Steps....16
5. Electrical Connection....18
5.1 Installation Precautions....18
5.3 Electrical Connections....19
5.3.1 System Wiring Diagram....20
5.3.2 External Grounding Requirements....21
5.3.3 Grounding Procedure....21
5.4 AC Side Connection....22
5.4.1 AC Side Requirements....22
5.5 DC Side Connection....24
5.5.1 PV Input Configuration....25
5.5.2 Assembling DC Connectors....25
5.5.3 Installing the DC Connector....26
5.5 Energy Storage Battery Cable Connection....27
5.6 Communication Connection....29
5.6.1 DCS Installation(WIFI module)....29
5.6.2 DCS Installation(4G module)....29
5.6.3 DCS Installation(WLAN module)....29
5.7 BMS-INV Communication Connection....30
5.8 Meter Communication Connection....30
6. Human-Computer Interaction....33
6.1 Installing the App....33
6.2 APP User manual....33
6.3 System debugging....33
7. Operation....34
7.2 Grid-Connected Inverter Operation....34
7.3 Inverter Shutdown....35
7.4 Inverter Removal....35
7.5 Abolition of Inverter....36
7.6 Routine Maintenance and Overhaul....36
7.6.1 Maintenance Precautions....36
7.6.3 Inverter Periodic Maintenance....37
7.7 Work Mode....38
8. Appendix....39
8.1 Technical Parameter....39
8.2 Quality Assurance....40
8.3 Isolating Switch Information....41

Preface

Overview

This manual provides the user with product information, detailed installation and use, troubleshooting and daily maintenance of the PV storage inverter.

It does not contain all information about the PV system.

To ensure the proper installation and use of the inverter and its superior performance, before handling, installation, operation and maintenance of the inverter, please read the instruction manual in detail and follow it.

Please read the operating instructions in detail and follow all safety precautions in the instructions.

Scope of application

This manual is intended for the following devices:

- HYX-H3K-HS
- HYX-H3K6-HS
- HYX-H4K-HS
- HYX-H4K6-HS
- HYX-H5K-HS
- HYX-H6K-HS
- HYX-H8K-HS

For readers

This manual is intended for professional technicians who need to install, operate and maintain the inverter and for users who need to check the inverter parameters.

All installation operations must be carried out by professional technicians and only by professional technicians.

Use of the manual

Please read the manual carefully before using the product, the content of the manual will be updated and corrected, but it is inevitable that there is a slight discrepancy or error with the actual product.

Users should refer to the actual product purchased and obtain the latest version of the manual by downloading from www.hyxipower.com or through sales channels.

The latest version of the manual is available for download at or through sales channels.

Use of symbols

In order to ensure the safety of the user's person and property when using the product, relevant information is provided and highlighted using the following symbols.

⚠ DANGER

- Indicates a high potential hazard that, if not avoided, could result in death or serious injury.

⚠ WARNING

- Indicates a moderate potential hazard that could result in death or serious injury if not avoided.

⚠ CAUTION

- Indicates a low potential hazard which, if not avoided, could result in moderate or minor injury.

NOTICE

- Indicates a potential risk which, if not known to be avoided, could result in the equipment not functioning properly or in property damage.

1. Safety Precautions

1.1 General Safety

NOTICE

- The "DANGER", "WARNING", "CAUTION", and "NOTICE" items in the manual do not include all safety precautions that should be observed. All work should be carried out in combination with the actual situation on site.
- This equipment should be used in an environment that meets the requirements of design specifications, otherwise it may cause equipment failure, and the resulting equipment functional abnormalities or component damage, personal safety accidents, property losses, etc., are not within the scope of equipment quality assurance.
- The installation, operation and maintenance of the equipment should comply with local laws, regulations and codes. The safety precautions in the manual, The safety precautions in the manual are only supplementary to the local laws and regulations.
- If an external residual current device (RCD) (type A is recommended) is mandatory, the switch must be triggered at a residual current of 300 mA(recommended). RCD of other specifcations can also be used according to local standard.

1.2 Public Grid

NOTICE

- All electrical connections must meet local and national electrical standards.
- The inverter may only be connected to the grid with the permission of the local electricity authority.

1.3 Photovoltaic String

DANGER

- When performing electrical connection work, you must wear personal protective equipment.
- Use a multimeter DC block to measure the positive and negative DC cable polarity to ensure that the polarity is correct; and the voltage is within the allowable range.
- After the DC cable is connected, please make sure that the cable is tightly connected and not loose.

1.4 Inverter

DANGER

- Before plugging or unplugging the PV connector or AC connector, please use a multimeter to measure to make sure there is no there is no voltage or current.
- Make sure that the voltage and frequency of the grid connection point are in accordance with the grid connection specification of the inverter.
- Do not open the inverter housing when the inverter is operating or energized to protect personnel and property safety.
- After removing all electrical equipment and disconnecting the inverter, wait at least 5 minutes for the internal capacitors to discharge.
- The protective ground of the inverter must be securely connected and, for multiple inverters, ensure that all inverters are connected to the protective ground.
- When multiple inverters are installed, ensure that all inverter enclosures are connected equipotentially to the protective ground. Install the equipment first.
- The protective ground is installed first; the protective ground is removed last when the equipment is dismantled.

WARNING

- After the inverter is installed, labels and warning signs shall be clearly visible, and obscuring, altering or damaging them is prohibited.
- After the inverter is shut down, there is still a risk of burns, after the inverter has cooled down, wear protective
- protective gloves before operation.

1.5 Personnel Requirements

NOTICE

- Personnel responsible for the installation and maintenance of Huayuxin equipment must first be strictly trained to understand the various
- The personnel responsible for the installation and maintenance of Huayuxin equipment must first undergo strict training to understand the various safety precautions and master the correct operation methods.
- Only qualified professionals or trained personnel are allowed to install, operate and maintain the equipment.
- The personnel who operate the equipment, including operators, trained personnel, professionals should have the special operating qualifications required by the local country, such as high voltage operation, special equipment operation qualification, etc.

2. Product Overview

This chapter mainly introduces the appearance of the grid-connected inverter, packaging accessories, nameplate, technical parameters, etc.

2.1 Product Description

HYX-H(3~8)K-HS is a single-phase string type PV grid-connected inverter, the main function is to convert the DC power generated by the PV string into AC power for load use, storage to the battery and output to the grid.

The main function is to convert the DC power generated by the PV string into AC power for use by the load, storage to the battery, output to the grid, etc. This paper mainly covers the following product models.

- HYX-H3K-HS
- HYX-H3K6-HS
- HYX-H4K-HS
- HYX-H4K6-HS
- HYX-H5K-HS
- HYX-H6K-HS
- HYX-H8K-HS

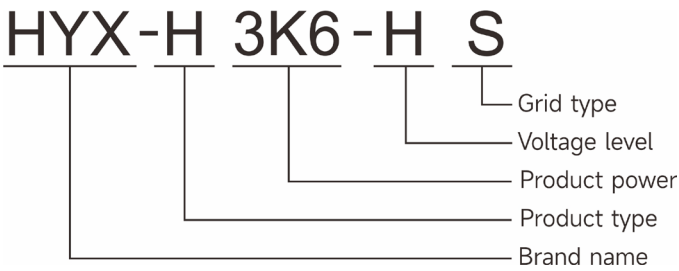

2.2 Photovoltaic Hybrid System

The PV hybrid system is composed of PV modules, inverter, battery, meter, load and grid.

The inverter is the core component of the PV hybrid system.

The solar energy is transformed into DC energy by the PV modules, and then transformed into sinusoidal AC energy with the same frequency and phase as the public grid by the hybrid inverter.

The hybrid inverter is used by the crystalline silicon solar cell set without grounded positive and negative poles as the DC input, battery pack as DC input.

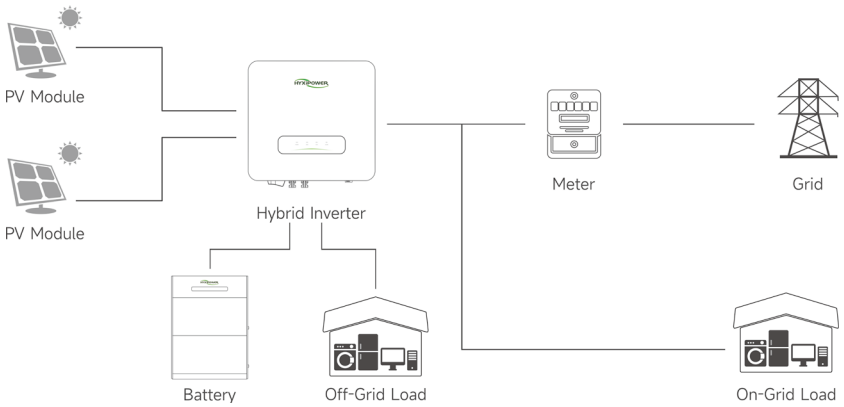

2.2.1 Grid Forms Supported By PV Grid-Connected Inverters

The grid forms supported by PV grid-connected inverters are TN-S, TN-C, TN-C-S, TT.

The voltage requirement of N to PE is less than 30V.

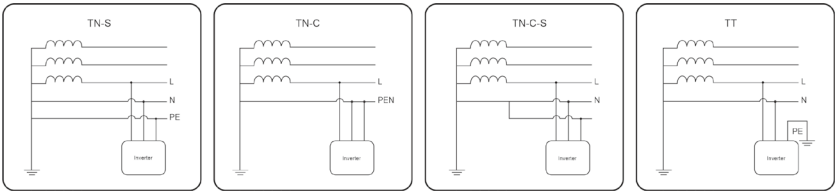

⚠ WARNING

- The inverter is only applicable to the grid-connected power generation system described in this paper.
- Since the inverter is transformerless type, it is required that both the positive and negative terminals of the PV module cannot be grounded, otherwise the inverter will otherwise the inverter will not operate normally.
- During the installation and operation of the inverter, please make sure that the positive or negative pole of the PV module will not be short-circuited to the ground, if short-circuited, it may if short-circuited, it may cause the inverter AC/DC short circuit, resulting in equipment damage, and the resulting damage will not be covered by the warranty.

⚠ CAUTION

- For TT type grids, the zero line voltage to ground must be less than 30V.
- Never connect local loads, such as household appliances, lighting loads, etc., between the inverter and the AC circuit breaker.

2.3 Nameplate Description

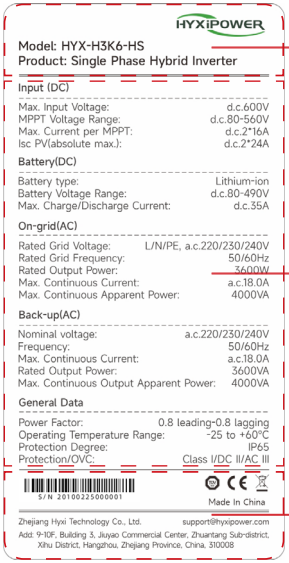

Hyxi trademarks, product types and product models.

Product technical parameters.

Safety symbols and certification marks.

Contact information and serial numbers.

2.4 Product Appearance

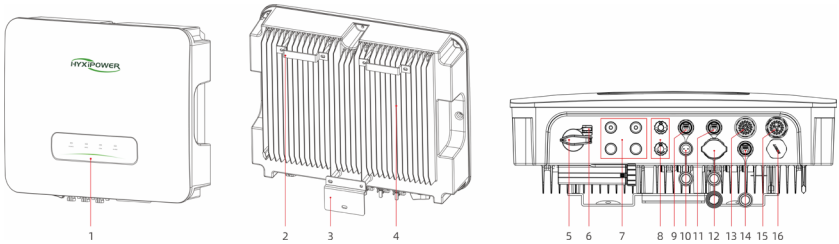

No.	Name	Description
1	LED Indicator Panel	Indicates the current operating status of inverter
2	Mounting Pegboard	Fixed inverter top
3	Mounting Bracket	Fixed inverter bottom
4	Fin Heat Sink	Heat dissipation and ventilation
5	DC Switch	On/Off DC input
6	DC Switch Lock	DC lock hole Reserved(Australia)
7	DC Input Terminal (PV+/PV-)	Inverter-PV
8	BAT Power Terminal(BAT+/BAT-)	INV-BAT Power
9	BAT Communication	BAT(RS485) Communication

No.	Name	Description
10	METER Port	Smart Meter
11	DRM Port	DRM function Reserved(Australia)
12	DCS	Monitoring Port
13	Back-up Port	Back-up(Off-grid) Output
14	Reserved Communication	Reserved Communication
15	AC Output Terminal	AC output to GRID/UTILITY
16	Pressure Relief Valve	Pressure Relief Valve(not for customer)

2.4.1 Symbol Description

Symbol	Description
5min	Disconnect power for at least 5 minutes before servicing the inverter.
	Do not touch the inverter housing while it is in operation.
	Only install and operate the inverter with professional personnel.
	Do not disconnect the inverter under load.

Symbol	Description
	Read the manual.
CE	CE mark of conformity.
	Do not dispose of the inverter as household waste.
	High touch current,earth connection essential before connecting supply.

2.5 Product Model

Product Name	Model	Rated Output Power (W)
Single-phase hybrid inverter	HYX-H3K-HS	3000
Single-phase hybrid inverter	HYX-H3K6-HS	3600
Single-phase hybrid inverter	HYX-H4K-HS	4000
Single-phase hybrid inverter	HYX-H4K6-HS	4600
Single-phase hybrid inverter	HYX-H5K-HS	5000
Single-phase hybrid inverter	HYX-H6K-HS	6000
Single-phase hybrid inverter	HYX-H8K-HS	8000

2.6 Dimensions & Weight

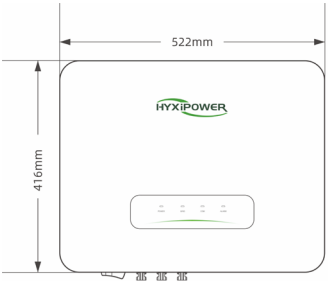

Weight: 20kg

2.7 LED Indicator Panel

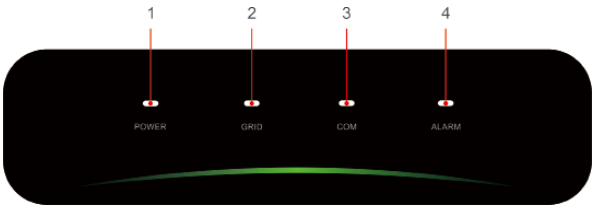

2.7.1 LED indicator status description

No.	Indicator	Status	Description
1	POWER	ON	Inverter Powered ON
		OFF	Inverter Powered OFF
2	GRID	ON	Grid Normal
		Blink 1	Grid Abnormal
		Blink 2	Grid Disconnected
3	COM.	ON	COM. Normal
		Blink 1	Meter COM. Fault
		Blink 2	COM. Fault With BMS
		OFF	Fault Both Meter & BMS
4	ALARM	OFF	Normal
		Blink 1	Inverter Internal Alarm
		Blink 2	Other Alarm

* 1 time flashing, interval 1.5 seconds; 2 times flashing, interval 0.2 seconds.

2.8 Description of The Principle

- The DC switch is used to safely cut off the DC current when necessary to ensure the safe operation of the inverter and the safety of personnel.
- The EMI filter filters out electromagnetic interference inside the inverter to ensure that the inverter can meet the requirements of EMC standards.
- The DC input is equipped with two MPPTs to ensure maximum power even under different PV input conditions.
- The inverter unit converts the DC power into grid-compliant AC power and feeds it into the grid.
- The AC filter filters the high frequency component of the inverter output current to ensure that the output current meets the grid requirements.
- The output relay isolates the inverter AC output from the grid and keeps the inverter safely off the grid in case of inverter or grid failure.
- The AC surge protector provides a drain circuit for the AC side overvoltage energy to prevent the impact of AC side overvoltage from causing the inverter internal circuit of the inverter is damaged.

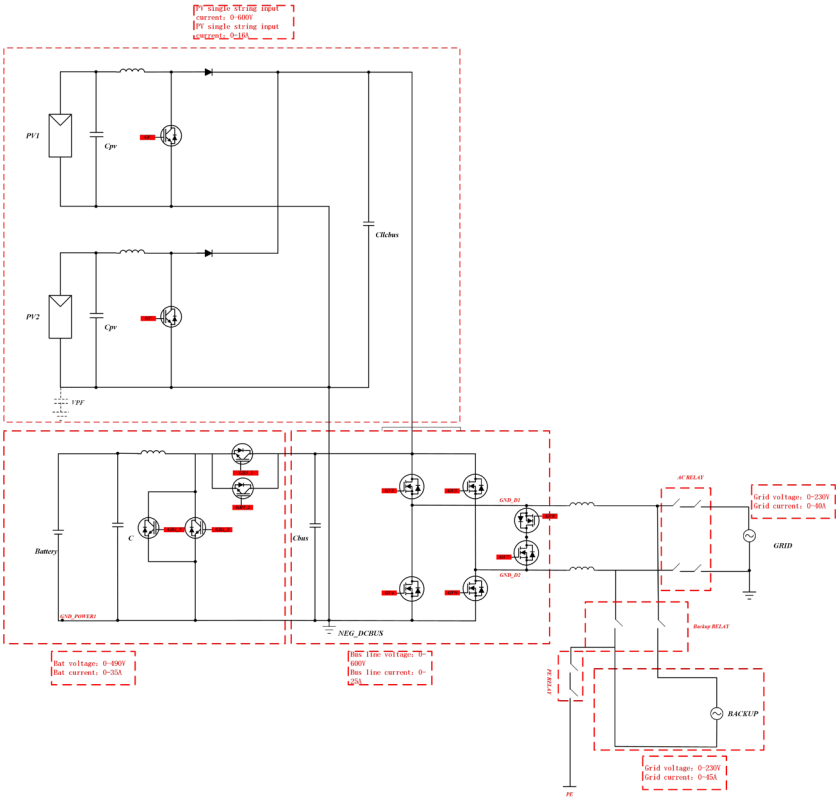

2.9 Functional Description

The functions of the inverter can be summarized as follows:

Inverter function:

- The inverter converts DC power into AC power that meets the requirements of the grid and feeds it into the grid.

Data storage function:

- The inverter stores operating information, fault records, and other system information.

Parameter configuration:

- The inverter provides a variety of parameter configurations, which can be configured via cell phone APP to meet various requirements or to optimize its operation.
- The user can configure the parameters through the mobile phone APP to meet various needs or adjust its operation to the best performance.

Communication interface:

- The inverter provides communication accessory port for accessing the communication

module and uploading the monitoring data to the monitoring background through wireless communication.

- After the communication equipment is successfully established, users can view the inverter-related information or set the inverter operating parameters, protection parameters, etc. through the Huayuxin Smart Energy Management Platform.
- After successful establishment with the communication equipment, users can view inverter-related information or set inverter operating parameters, protection parameters, etc. through the Huayuxin Smart Energy Management Platform.

Protection functions:

- The inverter is equipped with protection functions such as islanding protection, DC reverse connection protection, AC short circuit protection, leakage current protection, surge protection, etc.

3. Inspection & Storage

3.1 Unpacking and Inspection

The equipment has been completely tested and strictly inspected before leaving the factory, but it may still be damaged during transportation, please make a detailed inspection before signing the product.

- Check whether there is any damage to the packing box.
- Check if the goods are complete and in accordance with the packing list.
- Unpack and check if the equipment inside is intact.
- If there is any damage or incomplete goods, please contact with the shipping company or directly with Zhejiang Hyxi Technology Co., Ltd.
- Provide photos of the damage to facilitate the provision of services.

3.2 Inverter Storage

If the inverter is not immediately put into use, it is necessary to meet the following requirements when storing the inverter:

- Do not remove the outer packaging of the inverter.
- The inverter needs to be stored in a clean and dry place and protected from dust and water vapor.
- The storage temperature should be kept at -30°C to +60°C and the relative humidity should be kept at 0% ~ 100%RH.
- When stacking multiple inverters, it is recommended that they be placed in the same number of layers as originally shipped.
- Please place the inverters carefully to avoid personal injury or equipment damage caused by tipping the equipment.
- Avoid chemically corrosive substances, otherwise it may corrode the inverter.
- During the storage period, regular inspection is required. If insects and rodents bite the inverter or damage the packaging, the packaging material should be replaced in time.
- After long-term storage, the inverter needs to be inspected and tested by professionals before it can be put into use.
- Please do not dispose of the original packaging of the equipment. It is better to store the equipment in the original box after it is dismantled.

4. Mechanical Installation

4.1 Installation Precautions

⚠ DANGER

- Before installing the inverter, be sure that the inverter is free of any electrical connections.
- Make sure to avoid the utility alignments in the wall before drilling holes to avoid any danger.

⚠ CAUTION

- The instructions in the manual must be followed when handling and placing the equipment.
- Improper handling of the equipment may result in minor, serious or contusive injuries.
- The equipment heat sink must be kept uncovered to ensure adequate cooling inside the equipment.

4.2 Unpacking for Confirmation

The inverter has been completely tested and rigorously inspected before leaving the factory, but damage may still occur during transport. Check carefully before unpacking. Check that the product information on the order and box nameplate is consistent and that the product packaging is intact.

If any damage is detected, please contact the shipping company or contact the supplier directly and provide photos of the damage to facilitate the fastest and best service. When the inverter is stored unused, please put it in the original packing box and keep it moisture and dust proof.

After unpacking the inverter, please check the following items:

- Make sure the inverter main unit is complete and undamaged.
- Make sure the box contains the quick installation guide, certificate of conformity, packing list, interface accessories and installation accessories.
- Confirm that there is no damage or shortage in the delivered contents of the box.
- Verify that the product information on the order and the inverter mainframe nameplate is consistent.

4.3 Pre-Installation Preparation

4.3.1 Installation Tools

Installation tools include, but are not limited to, the following recommended tools and, if necessary, other auxiliary tools can be used in the field.

4.3.2 Installation Environment

Installation environment requirements:

- The inverter has IP65 protection level and can be used for indoor or outdoor installation.
- The installation location should be convenient for electrical connection, operation and maintenance.
- No flammable and explosive materials should be present in the installation environment.
- It must not be installed in a location that is accessible to children.
- Temperature should meet: -25 to +60°C ; Humidity should meet: 0 ~ 100% RH.
- Avoid direct sunlight, rain and snow on the inverter, and choose a sheltered place for the installation to extend the life of the inverter.
- It is very important to make sure the inverter is ventilated and dissipated smoothly, please install the inverter in a ventilated environment.
- The inverter will generate some noise during operation, so it is not recommended to install it in the living area.

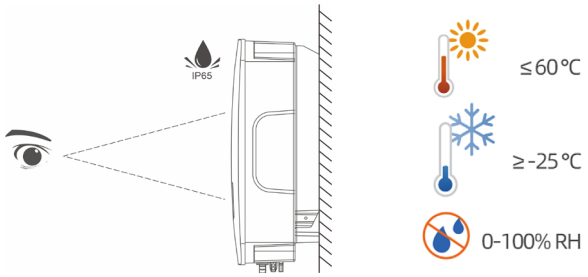

Installation angle requirements:

- The mounting carrier has a load-bearing capacity of at least 4 times the weight of the inverter, and the carrier has fireproof characteristics.
- It is recommended that the inverter be installed vertically or tilted back ≤ 15° to facilitate the heat dissipation of the machine.
- Do not tilt the inverter forward, backward, upside down, horizontally or sideways.

Installation space requirements:

Make sure there is enough space around the inverter to ensure ventilation. The installation space requirements for a single inverter are shown in the figure below.

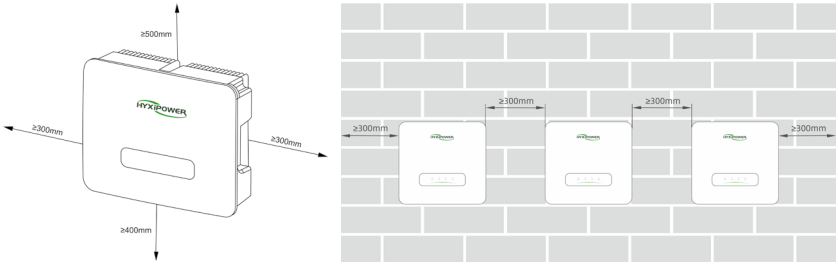

4.4 Handling the Inverter

Before installation, the inverter needs to be removed from the packing box and moved to the selected installation site, when moving the inverter, the following guidance instructions need to be observed:

- Always pay attention to the weight of the inverter.
- Use the handles on both sides of the inverter to lift the inverter.
- One or two installers move the inverter together, or use a suitable moving tool.
- Do not loosen the unit unless it is securely fastened.

4.5 Installing the Inverter

After carrying the inverter to the installation site, mount the pegboard to the wall with the expansion bolt assembly, and then hang the inverter on the pegboard.

4.5.1 Hanging Plate Size

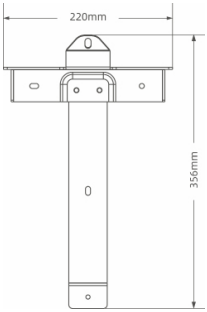

4.5.2 Installation Steps

- Step 1: Place the wall plate horizontally on the wall, recommend to select the hole position shown in the picture and mark the drilling position.
- Step 2: Drill a hole at the location shown, the depth of the hole is about 70mm.
- Step 3: Place the expansion tube and install the wall plate using the expansion bolt assembly.
- Step 4: Secure the mounting plate with M6 screws.
- Step 5: Hang the mounting lugs onto the peg plate and tighten them with M6 screws and finally lock them.

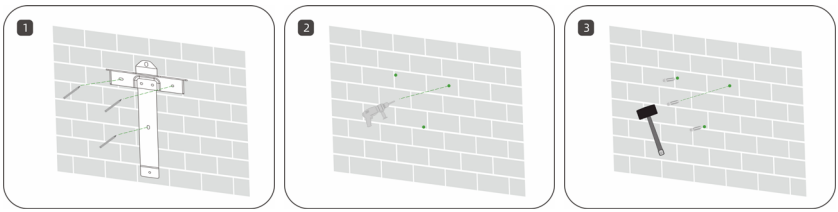

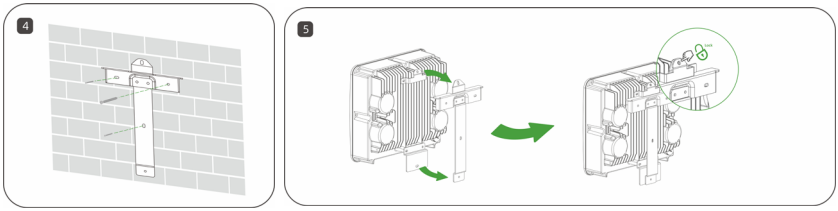
4
5

5. Electrical Connection

5.1 Installation Precautions

Before electrical connection, please remember that the inverter has a dual power supply. During electrical operation, professional personnel must wear protective equipment.

⚠ DANGER

- High voltage may be present in the inverter.
- Exposure of the PV module to sunlight will generate dangerous voltages.
- Do not close the AC/DC circuit breaker before completing the electrical connection and prevent misconnection.
- Make sure that all cables are not energized before making electrical connections.

⚠ CAUTION

- Damage to the equipment caused by incorrect wiring is not covered by the equipment warranty.
- Operations related to electrical connections must be performed by a professional electrical technician.
- The N and PE wires of the inverter ON-GRID and BACK-UP ports are wired differently depending on the regulatory requirements of the region.
- The N and PE wires of the ON-GRID and BACK-UP ports of the inverter are wired differently according to the regulatory requirements in different regions.
- The inverter ON-GRID and BACK-UP AC ports have built-in relays. When the inverter is in off-grid mode, the built-in
- When the inverter is in off-grid mode, the built-in ON-GRID relay is open; when the inverter is in grid-tied mode, the built-in ON-GRID relay is closed.
- is closed when the inverter is in grid-connected mode.
- When the inverter is powered on, the AC port of BACK-UP is charged, if you need to do maintenance on BACK-UP load, please turn off the inverter.
- If the inverter is powered up, the BACK-UP AC port is powered.

5.2 Electrical Connection Overview

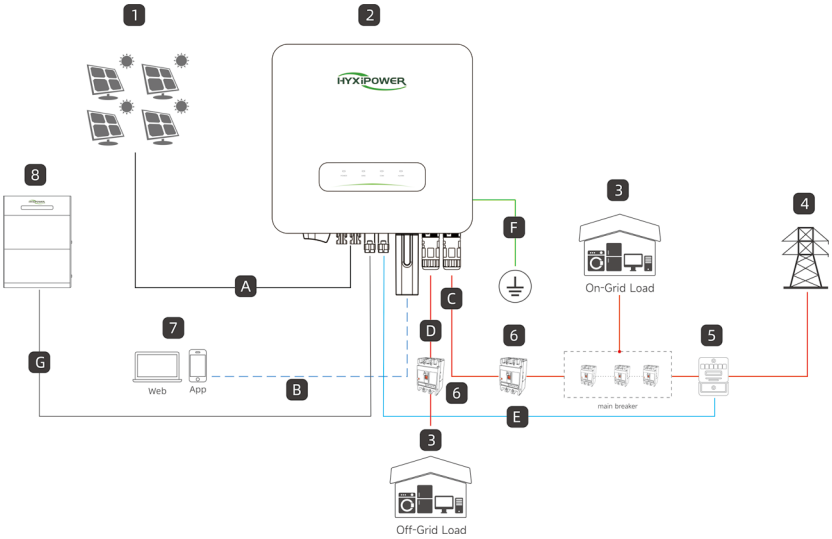

1、PV module 2、Hybrid Inverter 3、Load (On/Off-Grid) 4、Grid
5、Meter 6、AC Circuit Breaker 7、Hyxi Cloud 8、Battery

No.	Cable	Type	Specifications
A	PV cable	Outdoor multi-core copper wire cable complying with 600 V and 16 A standard.	4~10mm²
B	Communication cable	CAT 5E outdoor shielded network cable.	
C	AC output cable	three-core outdoor copper core cable (L,N,PE).	4~10mm²
D	BACKUP output cable	three-core outdoor copper core cable (L,N,PE).	
E	Ethernet cable	CAT 5E outdoor shielded network cable.	0.2mm²~ 0.35mm²
F	Ground cable	Ensure that all ground wires are grounded.	4~10mm²
G	Battery power cable	Complying with 600 V and 35A standard.	6mm²

Grid Cable and Micro-breaker recommended

Model	HYX-H3K-HS	HYX-H3K6-HS	HYX-H4K-HS	HYX-H4K6-HS	HYX-H5K-HS	HYX-H6K-HS	HYX-H8K-HS
Cable(copper)	4-6mm²	6-8mm²	6-8mm²	8-10mm²	8-10mm²	8-10mm²	8-10mm²
Micro-Breaker	32A	40A	50A	50A	50A	50A	50A

5.3 Electrical Connections

⚠ WARNING

- Since the inverter is transformerless, the positive and negative terminals of the PV string must not be grounded, otherwise the inverter will not operate properly.
- Otherwise, the inverter will not operate properly.
- Before connecting the AC side, the PV string and the communication connection, please make an external ground connection.

WARNING

- The ground connection of the external protective earth terminal is not a substitute for the connection of the PE terminal in the AC wiring, but must ensure that both are reliably grounded.
- Otherwise, SunPower will not take any responsibility for the possible consequences.

5.3.1 System Wiring Diagram

NOTICE

- N and PE wiring via ON-GRID and BACK-UP ports of the inverter are different based on the regulation requirements of different regions. Refer to the specific requirements of local regulations.
- There are integrated relays inside of the inverter's ON-GRID and BACK-UP AC ports. When the inverter is in the off-grid mode, the ON-GRID relay is disconnected; while when the inverter is in grid-tied mode, it is connected.
- When the inverter is powered on, the BACK-UP AC port is live. Power off the inverter first if maintenance is required for the loads connected to BACK-UP ports. Otherwise, it may cause electric shock.

N and PE cables are connected together in the Main Panel for wiring

NOTICE

- The following diagram is applicable to areas in Australia, New Zealand, South Africa, etc.

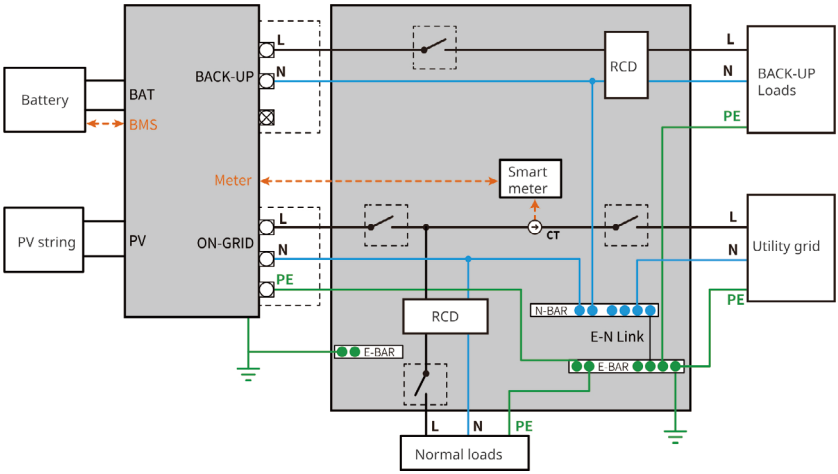

N and PE cables are separately wired in the Main Panel

NOTICE

- The following diagram is applicable to areas except Australia, New Zealand, South Africa.

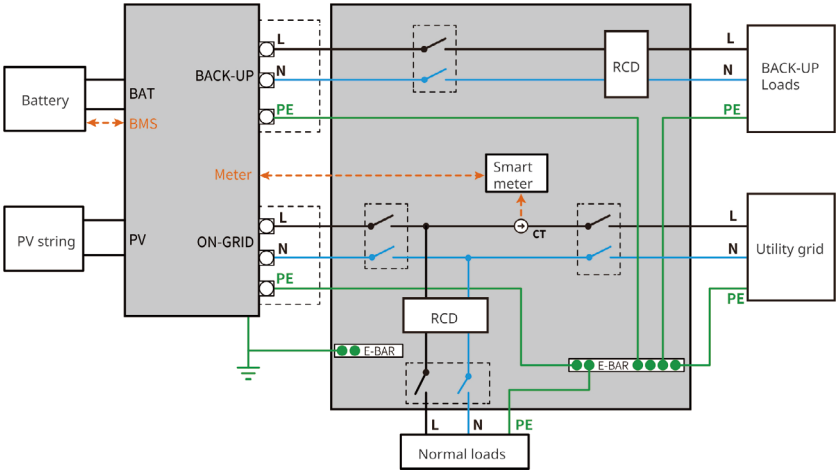

5.3.2 External Grounding Requirements

- In the PV power generation system, all non-current-carrying metal parts and equipment housings should be grounded (e.g. PV mounts, etc.).
- The external grounding terminal of a single inverter should be grounded near the end.
- When there are multiple inverters, the external grounding terminals of all inverters and the grounding points of PV mounts should be connected to the equipotential line (depending on the site conditions) to ensure that the external grounding of all inverters is grounded.
- depending on the site conditions) to ensure equipotential connection.

WARNING

- Make sure this terminal is permanently grounded.

5.3.3 Grounding Procedure

The cross-sectional area of the secondary grounding cable must be the same as the cross-sectional area of the PE core in the AC cable.

The secondary grounding cable and terminal block are to be prepared by the customer.

- Step 1: Make the cable and crimp the terminal block.

- Step 2: Remove the screws from the grounding terminal and use a screwdriver to secure the cable.

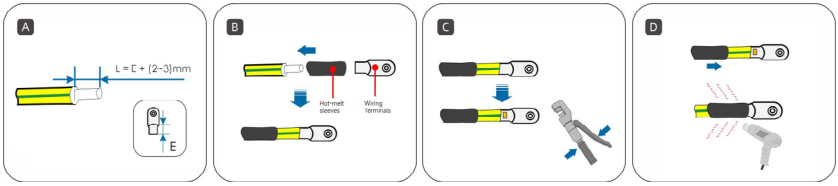

- Step 3: Apply silicone or paint to the grounding terminal to improve its corrosion resistance.

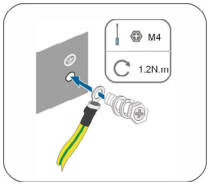

5.4 AC Side Connection

5.4.1 AC Side Requirements

Before connecting to the grid, make sure that the grid voltage and frequency meet the requirements of the inverter, please refer to the "Technical Data" for detailed parameters. Otherwise, contact the power company to solve the problem.

NOTICE

- Inverters can only be connected to the grid with the local power company's access permit.

AC Circuit Breakers

To ensure that the inverter can be safely disconnected under load, each inverter must be equipped with a separate two-pole AC circuit breaker as

protection device.

NOTICE

- Multiple inverters must not share a single AC circuit breaker.
- No load may be connected between the inverter and the AC circuit breaker.

Leakage current protector

The inverter is equipped with an integrated integrated leakage current monitoring unit inside the inverter, which detects a leakage current greater than the permissible value and quickly disconnects from the inverter will quickly disconnect from the grid when it detects a leakage current greater than the allowed value.

5.4.2 AC Side Wiring(ON-GRID and BACK-UP)

⚠ WARNING

- Not in accordance with local standards, regulations or Huayuxin recommended values, the use of oversized AC switches, abnormal conditions may not be
- It may not be disconnected safely in time and cause serious malfunction.
- Do not connect loads between the inverter and the AC switch directly connected to the inverter to avoid false disconnection of the switch.
- If the inverter detects the residual current exceeds the allowable value, it will quickly disconnect from the power grid.
- When the residual current exceeds the allowed value, the inverter will quickly disconnect from the grid.
- The inverter ON-GRID and BACK-UP AC ports have built-in relays. When the inverter is in off-grid mode, the built-in
- ON-GRID relay is open when the inverter is in off-grid mode; when the inverter is in grid-tied operation, the built-in ON-GRID relay is closed.
- Is closed when the inverter is in grid-connected mode.
- When the inverter is powered on, the AC port of BACK-UP is charged, if you need to do maintenance on BACK-UP load, please turn off the inverter, otherwise, electric shock may result.

On-grid and back-up wiring are totally same.

- Step 1: Crimp the terminals with crimping pliers.
- Step 2: Set the parts on the cable. Insert the terminal holes in sequence.
- Step 3: Crimp the wire with an inner hexagon screwdriver and screw the torque 1.2+/-0.1N·m.
- Step 4: Insert the main body into the rubber core and hear the “click” sound.
- Step 5: Tighten the nut with an open-ended wrench(torque 2.5±0.5N·m)
- Step 6: Installation arrow indicates insertion the male connector. Complete the installation.

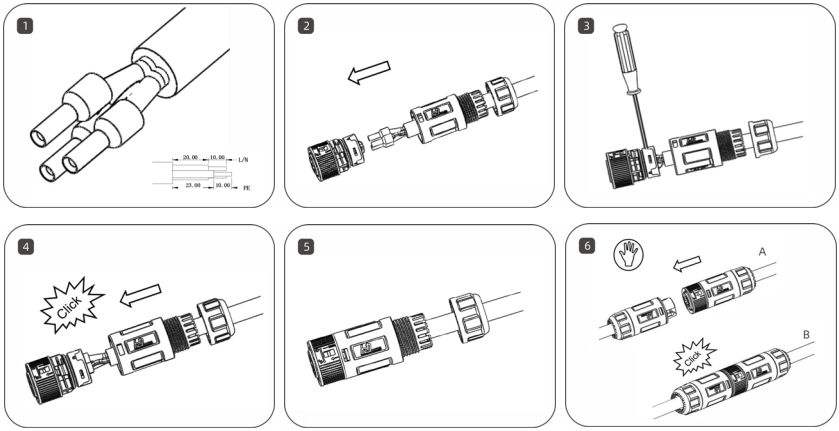

5.5 DC Side Connection

⚠ DANGER

- Before connecting the DC input line, make sure that the DC side voltage is within the safe voltage range and that the inverter's "DC
- SWITCH" of the inverter is set to "OFF". Otherwise, the high voltage generated may cause a risk of electric shock.
- When the inverter is in operation, it is forbidden to perform maintenance operations on the DC input line, such as accessing or disconnecting a string or a component in a string, otherwise it may lead to electric shock hazard.
- If the DC input terminal of the inverter is not connected to the PV string, do not remove the waterproof cover of the DC input terminal, as this will affect the protection level of the equipment will be affected.
- Do not connect the same PV string to more than one inverter, as this may cause damage to the inverter.
- Before connecting the PV string to the inverter, please confirm the following information, otherwise the inverter may be permanently damaged, and in serious cases, it may
- If not, it may cause permanent damage to the inverter, and in severe cases, it may cause a fire and damage to people and property.
- Make sure that the maximum short-circuit current and maximum input voltage of each MPPT are within the allowable range of the inverter.
- Make sure that the positive terminal of the PV string is connected to PV+ of the inverter and the negative terminal of the PV string is connected to PV- of the inverter.

⚠ WARNING

- Please make sure that the following conditions are met. Failure to do so may result in damage to the inverter or even cause a fire hazard.
- The PV string output does not support grounding. Before connecting the PV string to the inverter, please make sure that the minimum insulation resistance to ground of the PV string
- Before connecting the PV string to the inverter, make sure that the minimum insulation resistance to ground of the PV string meets the minimum insulation impedance requirement (R=maximum input voltage/30mA). If the insulation impedance value is less than this requirement, the inverter will trigger the insulation impedance alarm.

5.5.1 PV Input Configuration

The inverter has two PV input areas, each equipped with an independent MPPT that can operate independently.

In order to make full use of the PV panel input power, the PV strings in the same input area should have the same structure, including: the same type,

number of panels, tilt angle and azimuth angle.

The structure of PV strings in different input areas can be different, including: different panel types, different number of cells in the string, different tilt and azimuth angles.

The same tilt and azimuth angles.

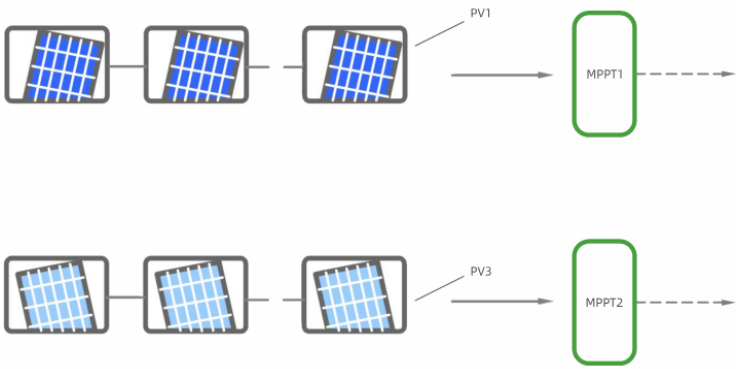

5.5.2 Assembling DC Connectors

- Step 1: Strip all DC cable insulation by approximately 7 mm.
- Step 2: Use crimping pliers to bundle the cable ends at the terminals.
- Step 3: Insert the cable through the cable sealing sleeve, insert it into the insulating sleeve and fasten it, and pull the cable gently to make sure it is tightly connected. Use 2.5 ~ 3N-m force to tighten the sealing sleeve and insulation sleeve.
- Step 4: Use a multimeter to check the correct polarity of the PV string connection cable.

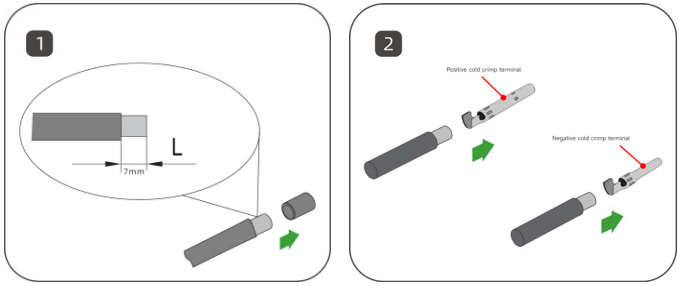

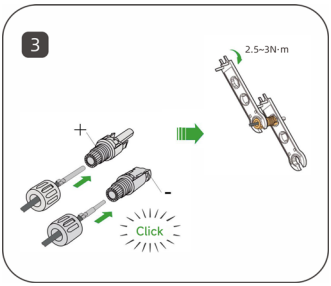

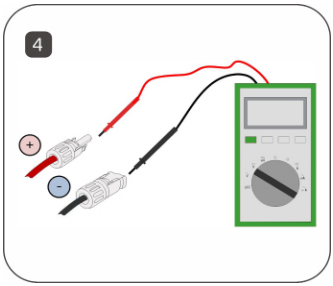

DANGER

- High voltage may be present in the inverter!
- Make sure that all cables are not energized before performing electrical operations.
- The AC circuit breaker switch must not be closed until the inverter electrical connections are complete.

CAUTION

- If the DC input polarity is reversed, the inverter will be in a fault or alarm condition and will not operate properly.
- Please follow the above requirements to choose the correct terminals, otherwise the damage caused to the equipment will not be covered by the warranty.

5.5.3 Installing the DC Connector

- Step 1: Turn the DC switch to "OFF" manually.
- Step 2: Check the PV string cable connections for correct polarity and make sure that the open circuit voltage does not exceed the inverter
- input limit of 600 V.
- Step 3: Connect the PV connectors to the corresponding terminals until a click is heard and seal the vacant DC terminals with MC4 waterproof plugs.

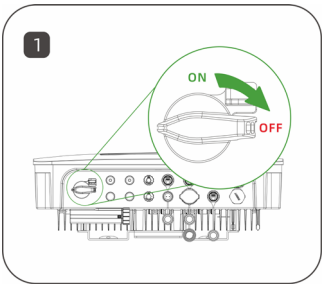

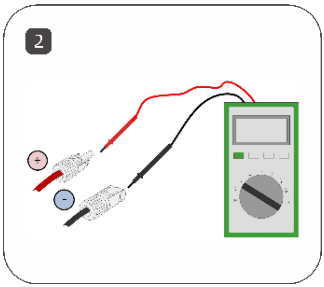

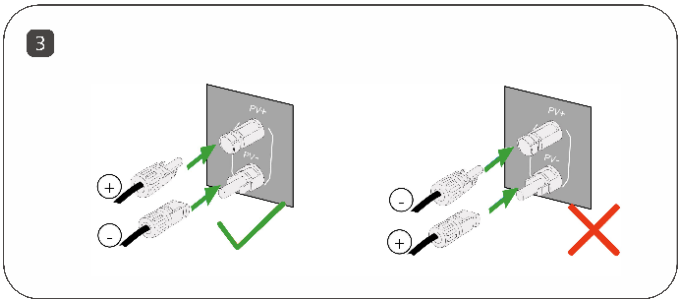

5.5 Energy Storage Battery Cable Connection

DANGER

- The batteries used with the inverter are subject to the approval of the inverter manufacturer.
- A shorted battery may cause personal injury and the instantaneous high current caused by a short circuit can release a large amount of energy and may cause fire.
- When wiring, ensure that the cable connections from the energy storage device terminals to the energy storage switch and from the energy storage switch to the inverter energy storage terminals are of the correct polarity.
- Make sure that the cable connections from the energy storage device terminals to the energy storage switch and from the energy storage switch to the inverter energy storage terminals are of correct polarity.
- Before connecting the battery cable, make sure that the inverter and battery are disconnected and that both the front and rear switches of the device are disconnected.
- It is forbidden to connect and disconnect the battery cables when the inverter is running; violation may result in electric shock hazard.
- Do not connect the same battery pack to more than one inverter, as this may cause damage to the inverter.
- When connecting battery cables, use insulated tools to prevent accidental electric shock or short-circuiting of the batteries.
- Make sure that the battery open circuit voltage is within the allowable range of the inverter.
- (According to local safety regulations) A DC switch is required between the inverter and the battery.

⚠ WARNING

- Please make sure that the wire cores are fully connected into the terminal wiring holes and not exposed.
- Make sure the cable connection is tight, otherwise the terminals may overheat when the equipment is running and cause damage to the equipment.
- Do not connect a load between the inverter and the energy storage device.
- Make sure the polarity of the energy storage cable is correct, i.e. the positive terminal of the energy storage device is connected to the positive terminal of the inverter energy storage terminal, and the negative terminal is connected to the negative terminal of the inverter energy storage terminal.
- The positive terminal of the energy storage device is connected to the positive terminal of the inverter energy storage terminal and the negative terminal is connected to the negative terminal of the inverter energy storage terminal. Failure to do so may result in damage to the inverter or even cause a fire hazard.

- Step 1: Strip off the insulation layer of all DC cables by about 7mm.
- Step 2: Use crimping pliers to bundle the cable ends at the wiring terminals.
- Step 3: Pass the cable through the cable gland, insert the insulating sleeve and fasten it. Gently pull the cable to ensure that it is connected and fastened. Use a force of 2.5~3N · m to tighten the gland and insulating sleeve.
- Step 4: Use a multimeter to check and confirm that the polarity of the photovoltaic string connecting cable is correct.

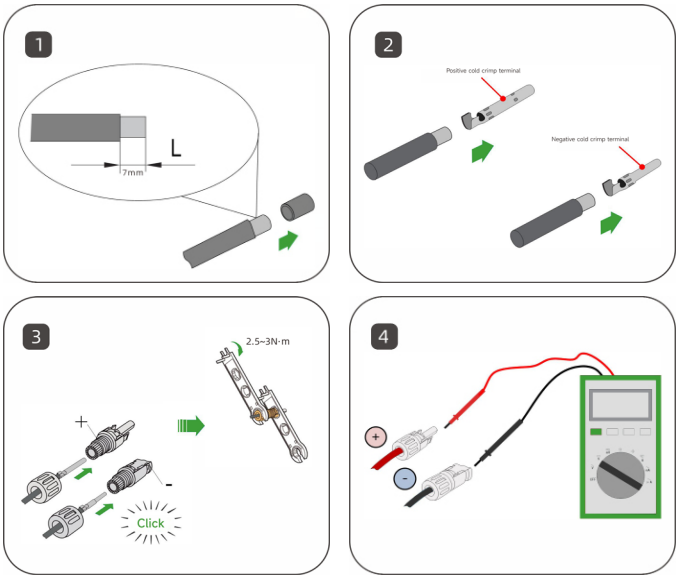

5.6 Communication Connection

5.6.1 DCS Installation(WIFI module)

- Step 1: Remove the waterproof cover at the communication interface of the inverter;
- Step 2: Insert DCS into the corresponding communication terminal at the bottom of the inverter and tighten it to ensure it is secure.

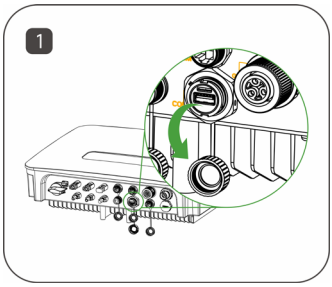

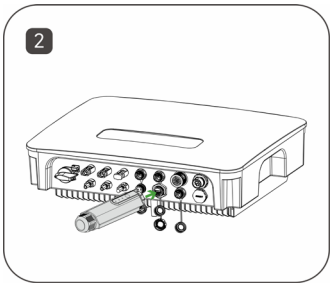

5.6.2 DCS Installation(4G module)

- Step 1: Remove the protective cover of DCS and insert the SIM card;
- Step 2: Install the waterproof cover of DCS;
- Step 3: Remove the waterproof cover at the communication interface of the inverter;
- Step 4: Insert DCS into the corresponding communication terminal at the bottom of the inverter and tighten it to ensure it is secure.

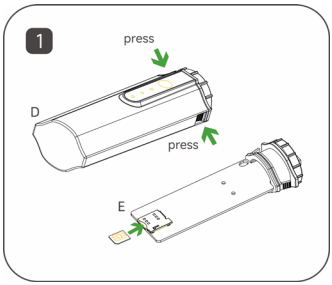

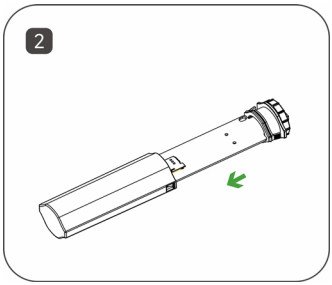

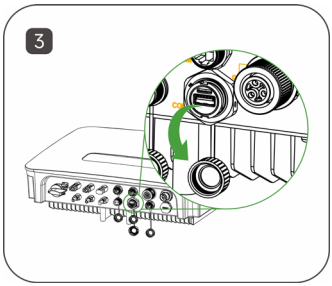

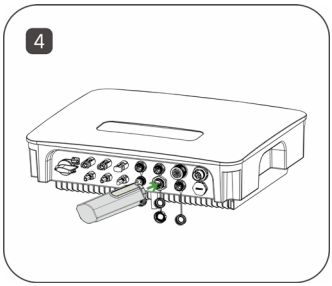

5.6.3 DCS Installation(WLAN module)

- Step 1: Replace the bottom plug of DCS with the WLAN plug;
- Step 2: Insert the network cable connector into the network junction;

- Step 3: Remove the waterproof cover at the communication interface of the inverter;
- Step 4: Insert DCS into the corresponding communication terminal at the bottom of the inverter and tighten it to ensure it is secure.

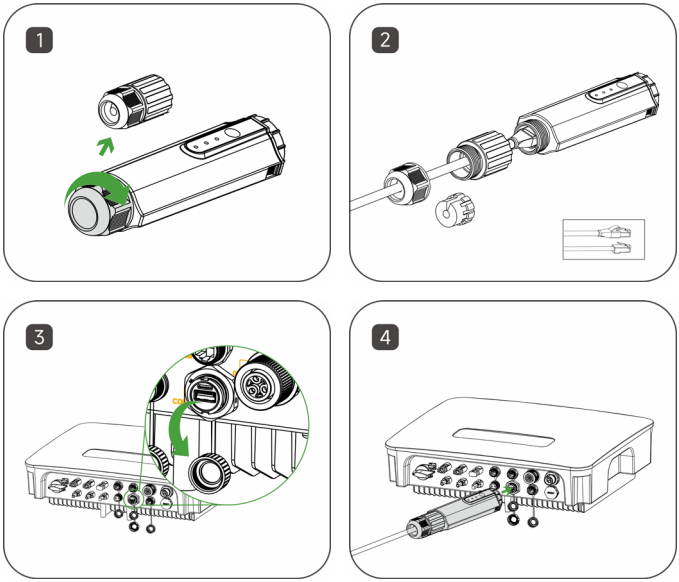

5.7 BMS-INV Communication Connection

BMS port definition

The communication interface between the inverter and the battery uses the waterproof connector with RJ45.

One 1m communication cable will be included as standard.

PIN	1	2	3	4
Definition	RS485_BAT_A	RS485_BAT_B	CAN_H	CAN_L

PIN	5	6	7	8
Definition	RT1	RT2	Reserve	Reserve

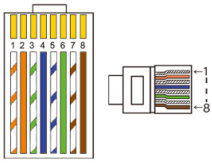

5.8 Meter Communication Connection

The inverter should work with an electric meter to monitor household electricity usage. The electricity meter can transmit the relevant electricity data to the inverter or platform, which is convenient for users to read at anytime.

⚠ CAUTION

- Please Notice that the meter model required by Hyxi must be used.

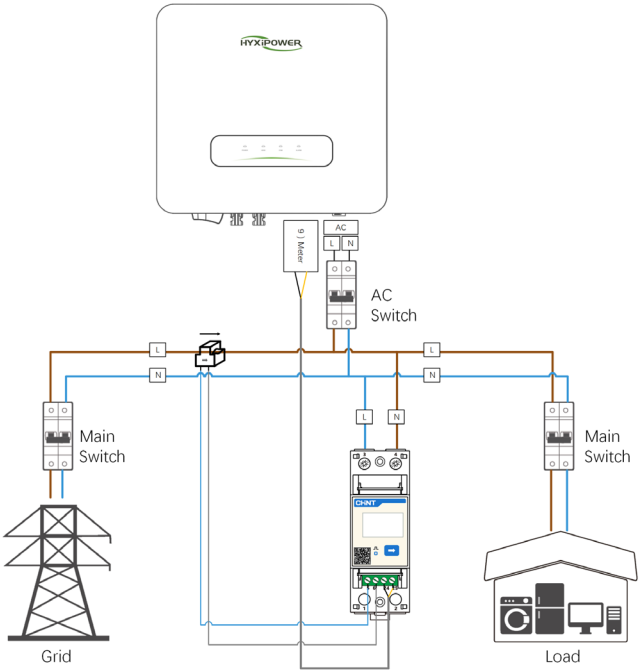

DRM

In Australia and New Zealand, the inverter supports the demand response modes as specified in the standard AS/NZS 4777.

The following figure shows the wiring between the inverter and the external DRED.

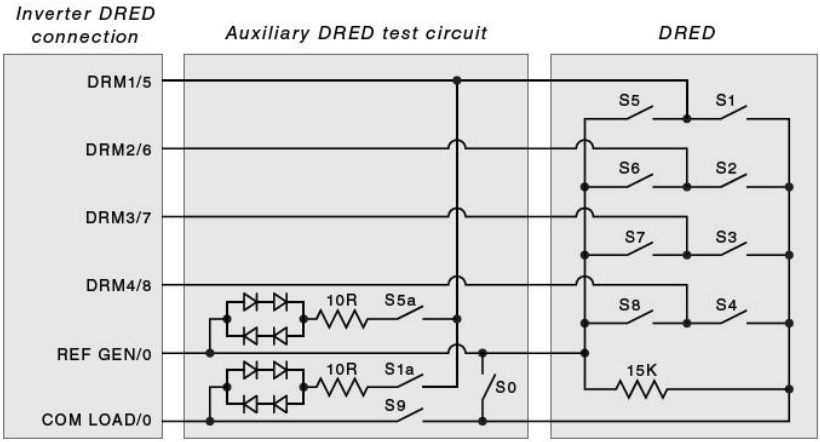

Mode	Inverter DRM Connection	Request
DRM0	REF GEN & COM LOAD	When switches S0 and S9 are switched on, the solar inverter should be turned off. When switch S0 is switched off, and switch S9 is switched on, the solar inverter should be grid-tied.

The inverter is equipped with a RJ45 terminal for connecting the external DRED. As shown in the following figure, pin 5 and pin 7 are used for asserting the DRM0 mode.

PIN	1	2	3	4
Definition	DRM1/5	DRM2/6	DRM3/7	DRM4/8

PIN	5	6	7	8
Definition	COM LOAD/0	GND	REF GE/0	GND

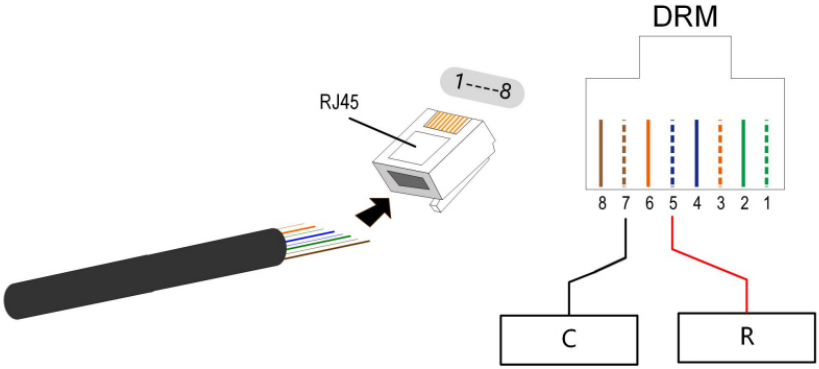

6. Human-Computer Interaction

6.1 Installing the App

Method 1

Download and install the App through the following application stores:

- App Store (iOS).
- Google App market (Android, users other than mainland China ones).

Method 2

Scan the following QR code to download and install the App according to the prompt information:

6.2 APP User manual

For more information on using the HYXiPower APP, please refer to the user manual "HYXiPower APP".

6.3 System debugging

For system configuration and debugging, please refer to the user manual "HYXipower Local Debugging APP".

7. Operation

This chapter introduces the operation of PV inverter, which mainly covers the inspection before inverter operation, inverter grid connection operation, inverter shutdown and inverter routine maintenance and repair precautions.

This chapter introduces the operation of PV inverter, mainly involves the inspection of inverter before operation, inverter grid connection operation, inverter shutdown, and inverter routine maintenance.

7.1 Pre-Operation Inspection

Before running the PV grid-connected inverter, the following items (not limited to) must be strictly checked:

- Confirm that the installation location of the inverter meets the requirements of Section 4.3.2 and ensure easy installation, disassembly, operation and maintenance of the inverter.
- Verify that the mechanical installation of the inverter meets the requirements of Section 4.5.
- Verify that the electrical connections to the inverter meet the requirements of Section 5.3.
- Verify that all switches are in the "off" position.
- Make sure no construction tools, etc. are left on the top of the machine or in the junction box (if the machine has one).
- AC circuit breakers are selected in accordance with this manual and local standards.
- All safety signs and warning labels are securely attached and clearly visible.
- Verify that the PV module open circuit voltage meets the requirements of the DC side parameters of the inverter in the Appendix.

⚠ CAUTION

- To ensure the safe, normal and stable operation of PV power generation systems, all newly installed, renovated and repaired grid-connected PV generation system and its grid-connected inverter must be inspected before operation.

7.2 Grid-Connected Inverter Operation

Please strictly follow the following steps to turn on the inverter and complete the grid-connected operation of the inverter:

- Step 1: Make sure that all items checked in section 6.1 are satisfied.
- Step 2: Close the AC side circuit breaker of the inverter public grid and the DC switch integrated with the inverter.
- Step 3: Observe the status of the inverter LEDs (see 2.7.1 LED Status Description for details).

7.3 Inverter Shutdown

⚠ CAUTION

- Burning hazard!
- After the inverter has been shut down, there is still a risk of burns. After the inverter has cooled down, it is necessary to wear protective gloves before operating the inverter.

It is not necessary to shut down the inverter under normal circumstances, but it is necessary to shut down the inverter when maintenance or repair work needs to be performed.

Follow the steps below to disconnect the inverter from the AC and DC power sources, as failure to do so may result in injury or damage to the equipment.

- Step 1: Disconnect the external AC circuit breaker and prevent reconnection due to misuse.
- Step 2: Disconnect the external DC circuit breaker and turn the DC switch of the inverter to "OFF".
- Step 3: Wait for at least 5 minutes until the internal capacitor is completely discharged.
- Step 4: Use a current clamp to check the DC cable to make sure there is no current.

7.4 Inverter Removal

⚠ CAUTION

- Danger of burns and electric shocks!
- After disconnecting the inverter from the grid and the PV panels, wait at least 5 minutes before touching the internal conductive components.

ⓘ NOTICE

- Before dismantling the inverter, both AC and DC must be powered down.
- If the inverter has more than two DC terminals, the outer DC connector needs to be removed before the inner DC connector can be removed.

- Step 1: Refer to "5. Electrical Connections" and follow the steps in reverse order to disconnect all electrical connections from the inverter.
- To remove the DC connector, use the MC4 wrench to loosen the locking part of the DC connector and install the waterproof plug.

- Step 2: Refer to "4. Mechanical Installation" and follow the steps in reverse order to remove the inverter.
- Step 3: If necessary, remove the wall plate.
- Step 4: If the inverter is to be put into use at a later date, store the inverter properly as described in "3.2 Inverter storage".

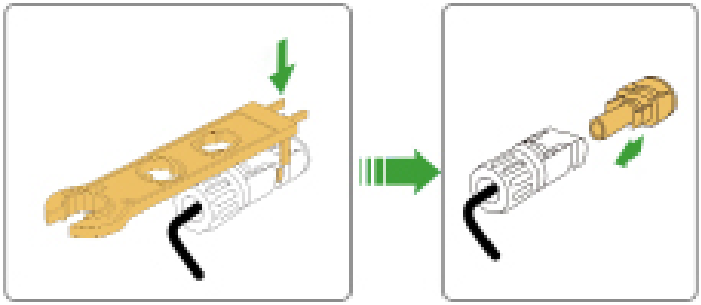

7.5 Abolition of Inverter

⚠ CAUTION

- Some parts and equipment of the inverter, such as capacitors, may cause environmental pollution.
- Please do not dispose of this product with household waste, and dispose of it in accordance with the regulations for disposal of electronic waste used at the installation site.

7.6 Routine Maintenance and Overhaul

In the solar PV grid-connected power generation system, the PV grid-connected inverter can automatically complete the operation of grid-connected power generation, stopping and switching on, etc. even when the day and night change and the season change.

In the solar photovoltaic grid-connected power generation system, the inverter can automatically complete the operation of grid-connected power generation and stop-start without human control. In order to ensure and extend the service life of the inverter, in addition to using the inverter in strict accordance with the contents of this manual, it is necessary to perform the necessary routine maintenance and repair of the inverter.

7.6.1 Maintenance Precautions

Improper maintenance operations can cause injury to personnel or damage to equipment.

⚠ DANGER

- Disconnect the grid-side AC circuit breaker, then disconnect the DC switch.
- Wait at least 5 minutes until the internal components are discharged before performing maintenance or service operations.
- Use test equipment to verify that no voltages or currents are present.

⚠ CAUTION

- When performing electrical connections and maintenance, post warning signs to prevent non-personnel from entering the electrical connection or maintenance area.
- Restart the inverter only after troubleshooting faults that affect the safety performance of the inverter.
- The inverter does not contain service parts inside, do not replace the internal components of the inverter without permission.
- Please contact Huayuxin after-sales service for maintenance, unauthorized disassembly of the machine Huayuxin will not assume any warranty and joint and several responsibilities.
- Comply with electrostatic protection norms and wear anti-static bracelets to avoid unnecessary contact with the circuit board.

7.6.2 Maintenance Instructions

The inverter cleaning steps are as follows.

- Step 1: Disconnect the input and output sides and wait 10 minutes.
- Step 2: Clean the inverter surface and the air inlet and outlet with a soft brush or vacuum cleaner.
- Step 3: Repeat section 6.1 and restart the inverter.

7.6.3 Inverter Periodic Maintenance

Inspection content	Inspection method	Maintenance
Save inverter operation data	Use monitoring software to read the inverter data in real time and regularly backup the data recorded by the monitoring software. Save the operation data, parameters, and logs of the inverter recorded in the monitoring software to a file. Check the monitoring software and view various parameter settings of the inverter through the hand-held keyboard.	Once/quarter

Inspection content	Inspection method	Maintenance
Inverter operation condition	Observe whether the inverter is firmly installed, and whether there is damage or deformation. Listen to the inverter for abnormal sounds. When the system is connected to the grid, check various variables. Check whether the inverter housing is heating normally, and use a thermal imager to monitor the system heating.	Once/half year
Inverter cleaning	Check the humidity and dust in the environment around the inverter, and clean the inverter if necessary.	Once/half year
Electrical connection	Check whether the system cable connection is loose and the inverter wiring terminals are loose, and then tighten them according to the method specified in Section 5.5.2. Check the cable for damage, especially if there are cuts on the skin that contact the metal surface.	Once/half year
Safety functions	Check the inverter LEDs and system shutdown function. Simulate the shutdown and check the shutdown signal communication. Check the warning label and replace it if necessary.	Once/half year

7.7 Work Mode

Hyxi inverter can meet different scenarios based on different needs.

- PV power generation mode: maximum power 8.8KW
- PV charge battery mode: maximum power 8KW
- Grid charge battery mode: maximum power 8KW
- Battery on-grid mode: maximum power 8KW
- Battery off-grid mode: maximum power 8KW

8. Appendix

8.1 Technical Parameter

Product Model	HYX-H3K-HS	HYX-H3K6-HS	HYX-H4K-HS	HYX-H4K6-HS	HYX-H5K-HS	HYX-H6K-HS	HYX-H8K-HS
PV Input							
Max. input power	4800W	5760W	6400W	7360W	8000W	9600W	9600W
Max. input voltage	600V						
Start-up voltage	50V						
MPPT operating voltage range	80 - 560V						
Max. input current per MPPT	16A/16A						
Max. short-circuit current	24A/24A						
Number of MPP trackers	2						
Max. input number per MPP tracker	1/1						
Max. reverse injection current	0A						
Battery Input							
Battery type	Li-ion						
Battery voltage Range	80 - 490V						
Max. charge/discharge Current	35A						
Max. charge/discharge Power	8000W						
AC Input/Output							
Rated output power	3000VA	3600VA	4000VA	4600VA	5000VA	6000VA	8000VA
Max. apparent power	3300VA	4000VA	4400VA	5060VA	5500VA	6600VA	8800VA
Rated output voltage	220 / 230 / 240V						
AC voltage range	154 - 276V						
Rated output current	13.6A	16.3A	18.1A	20.9A	22.7A	27.2A	36.3A
Max. output current	15.0A	18.0A	20.0A	23.0A	25.0A	30.0A	40.0A
Adjustable power factor	>0.99 (0.8 leading…0.8 lagging)						
THDi	<2%						
Frequency	50 / 45~55Hz; 60 / 55~65Hz						
DC current injection	< 0.5% In						
Inrush current	35A, 2ms						
Max. fault current	55A, 500ms						
AC Output (Back-Up)							
Rated output apparent power	3000VA	3600VA	4000VA	4600VA	5000VA	6000VA	8000VA
Max. output apparent power	3300VA	4000VA	4400VA	5060VA	5500VA	6600VA	8000VA
Max. output current	15.0A	18.0A	20.0A	23.0A	25.0A	30.0A	36.3A
Rated output voltage	220 / 230 / 240V						
Max. Total Harmonic Distortion	<3%						
Frequency	50 / 45~55Hz; 60 / 55~65Hz						
Efficiency							
Max. efficiency	98.6%						

Product Model	HYX-H3K-HS	HYX-H3K6-HS	HYX-H4K-HS	HYX-H4K6-HS	HYX-H5K-HS	HYX-H6K-HS	HYX-H8K-HS
European weighted efficiency	98.2%						
MPPT efficiency	99.9%						
Battery charge/ discharge efficiency	97.5%						
Protection							
DC insulation resisitance detective	Yes						
Residual current monitoring unit	Yes						
DC reverse polarity protection	Yes						
AC/DC surge arrester	Type II						
DC switch	Yes						
Anti-islanding protection	Yes						
AC over current protection	Yes						
AC short-circuit protection	Yes						
AC over voltage protection	Yes						
Grounded fault detection	Yes						
General Data							
Operating temperature range	-25 to + 60°C						
Relative operating humidity	0 - 100 %RH						
Operating altitude	4000m						
Cooling	Natural Cooling						
Display	LED & App						
Communiction	CAN / RS485 / WIFI (Standard) / 4G (Optional)						
Weight	20kg						
Demension (W*H*D)	522*416*177.6mm						
Degree of protection	IP65						
Mounting	Wall Mounted						

8.2 Quality Assurance

Zhejiang Hyxi Technology Co., Ltd. (hereinafter referred to as the Company) will repair or replace the product with a new one free of charge.

Evidence:

During the warranty period, customers need to show the invoice and date of purchase of the product. At the same time, the trademark on the product should be clearly visible, or the right not to quality assurance.

Conditions:

The replacement defective products shall be disposed of by the Company; the customer shall allow reasonable time for the Company to repair the defective equipment.

Liability Exemption:

We have the right not to carry out quality assurance if the following circumstances occur.

- The whole machine and parts have exceeded the free warranty period.
- Shipping damage.
- Incorrect installation, modification or use.
- Operation in very harsh environments beyond those described in this manual.
- Machine failure or damage caused by installation, repair, alteration or disassembly not by our service organization or personnel.
- Installation and use beyond the scope specified in the relevant international standards.
- Damage caused by an abnormal natural environment.

NOTICE

- In case of changes in product dimensions and parameters, the latest information of our company shall prevail without prior notice.

8.3 Isolating Switch Information

Isolating switch model	GHX5-32P/3P 750-40-2-0
Isolating switch manufacturer	Beijing People's Electric Plant Co., Ltd
(i) rated insulation voltage	1500V
(ii) rated impulse withstand voltage	8000V
(iii) suitability for isolation	Yes
(iv) rated operational current	40A
(v) utilization category and/or PV utilization category	DC-PV2
(vi) rated short-time withstand current Icw)	700A
(vii) rated short-circuit making capacity Icm)	1400A
(viii) rated breaking capacity	160A

8.4 Contact Information

If you have any questions about this product, please contact us.

In order to provide you with faster and better after-sales service, we need your assistance in providing the following information.

- Equipment model: _____
- Serial number of the device: _____
- Fault code / name: _____
- A brief description of the fault phenomenon:

_____

_____

Version: UMEN-H8K-HS-Ver1.0-202312
The manual is subject to change without notice while the product is being improved.

Zhejiang Hyxi Technology Co., Ltd.
Building 3, Jiuyao Commercial Center, Hangzhou, China, 310008
www.hyxipower.com
support@hyxipower.com